01 Nov 2009

Husqvarna GX4200

Illustrated Parts List

574 64 94-03

ASSEMBLY	GAS SAW
ENGINE ASSEMBLY	GX4200

510271602

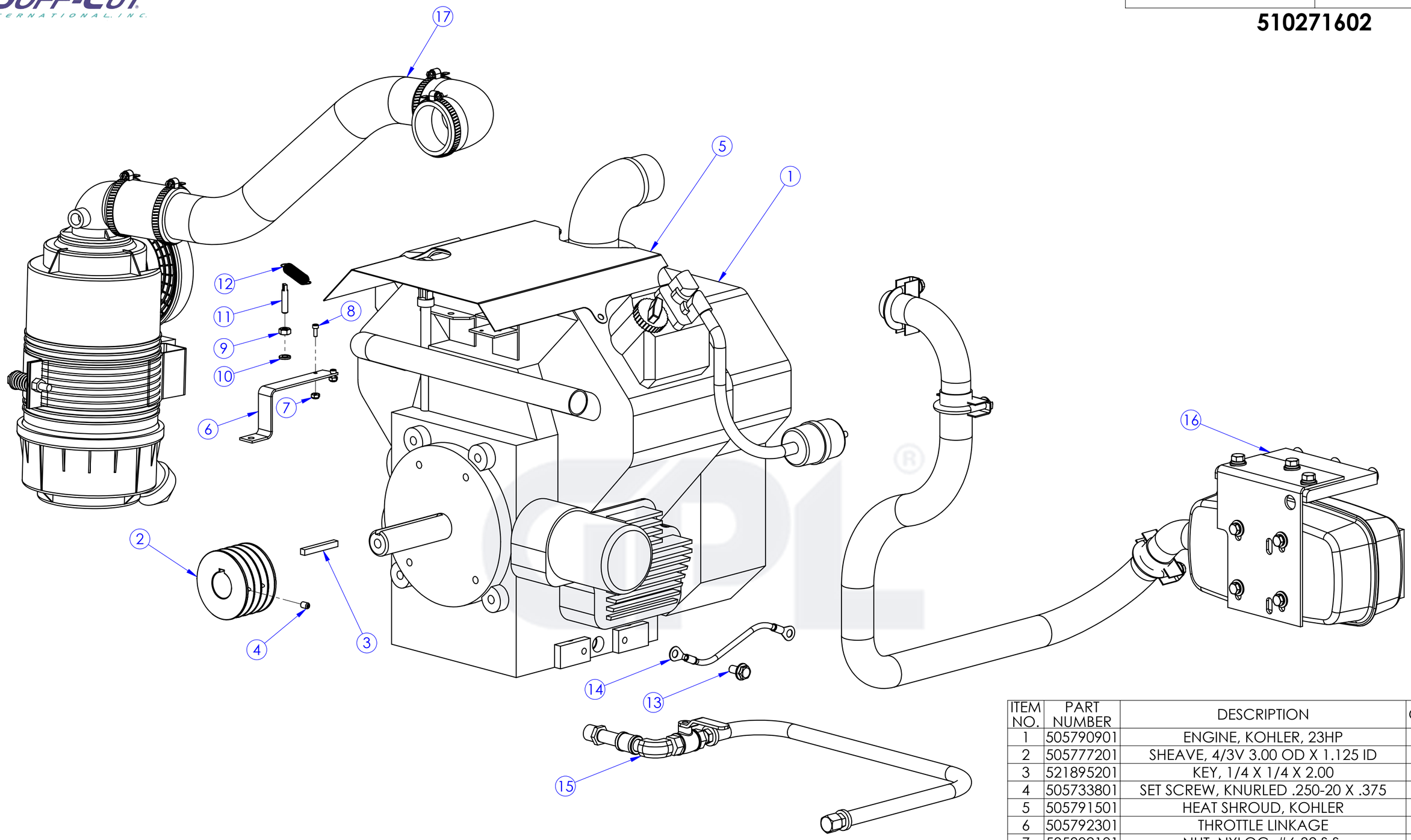

ITEM NO.	PART NUMBER	DESCRIPTION	QTY.
1	505790901	ENGINE, KOHLER, 23HP	1
2	505777201	SHEAVE, 4/3V 3.00 OD X 1.125 ID	1
3	521895201	KEY, 1/4 X 1/4 X 2.00	1
4	505733801	SET SCREW, KNURLED .250-20 X .375	4
5	505791501	HEAT SHROUD, KOHLER	1
6	505792301	THROTTLE LINKAGE	1
7	505802101	NUT, NYLOC, #6-32 S.S.	2
8	505627601	SHCS 6-32 X 3/8 S.S.	2
9	505631901	NUT, 1/4-20 HEX, S.S.	1
10	505632801	WASHER, SPLIT 1/4" S.S.	1
11	505774501	SPRING ANCHOR, 1/4-20 X 1	1
12	505635801	SPRING, GUIDE RETURN	1
13	505795601	HHB, FLANGE M8 X 1.25 X 16	1
14	575446605	KIT, GROUND WIRE, 5/16" RINGS	1
15	505857507	KIT, OIL DRAIN	1
16	574720502	EXHAUST SYSTEM ASSEMBLY	1
17	575660901	INTAKE SYSTEM ASSEMBLY	1

SUB-ASSEMBLY BILL OF MATERIAL

SOFF-CUT INT'L, INC. CLAIMS PROPRIETARY RIGHTS TO THE MATERIAL DISCLOSED IN THIS DOCUMENT. THIS DOCUMENT IS PROVIDED IN CONFIDENCE AND MAY NOT BE REPRODUCED OR DISCLOSED WITHOUT WRITTEN PERMISSION FROM SOFF-CUT INT'L. © COPYRIGHT 2007, SOFF-CUT INT'L, INC. ALL RIGHTS RESERVED.

ASSEMBLY	GAS SAW
KIT, MOTOR MOUNT	GX4200/X5000

575244803

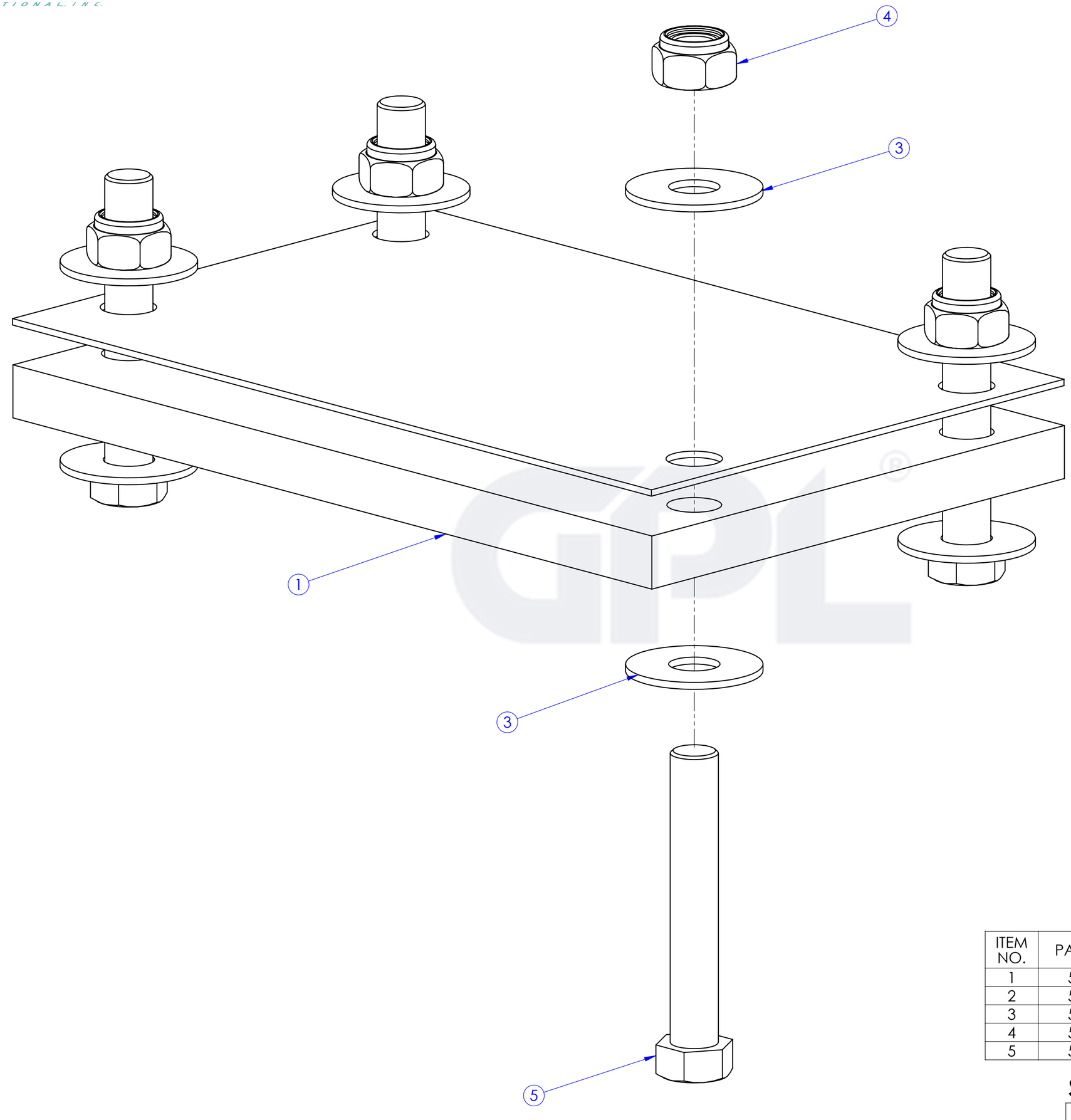

ITEM NO.	PART NUMBER	DESCRIPTION	QTY.
1	505793101	PAD, MOTOR MOUNT	1
2	505793201	PLATE, MOTOR MOUNT	1
3	505731501	WASHER, 7/16" FLAT USS	8
4	505795401	NUT, NYLOC, 7/6-14 S.S.	4
5	505727901	HHB 7/16-14 X 2 3/4 S.S.	4

SUB-ASSEMBLY BILL OF MATERIAL

SOFF-CUT INT'L, INC. CLAIMS PROPRIETARY RIGHTS TO THE MATERIAL DISCLOSED IN THIS DOCUMENT. THIS DOCUMENT IS PROVIDED IN CONFIDENCE AND MAY NOT BE REPRODUCED OR DISCLOSED WITHOUT WRITTEN PERMISSION FROM SOFF-CUT INT'L. © COPYRIGHT 2007, SOFF-CUT INT'L, INC. ALL RIGHTS RESERVED.

ASSEMBLY	GAS SAW
INTAKE SYSTEM ASSEMBLY	GX4200

575660901

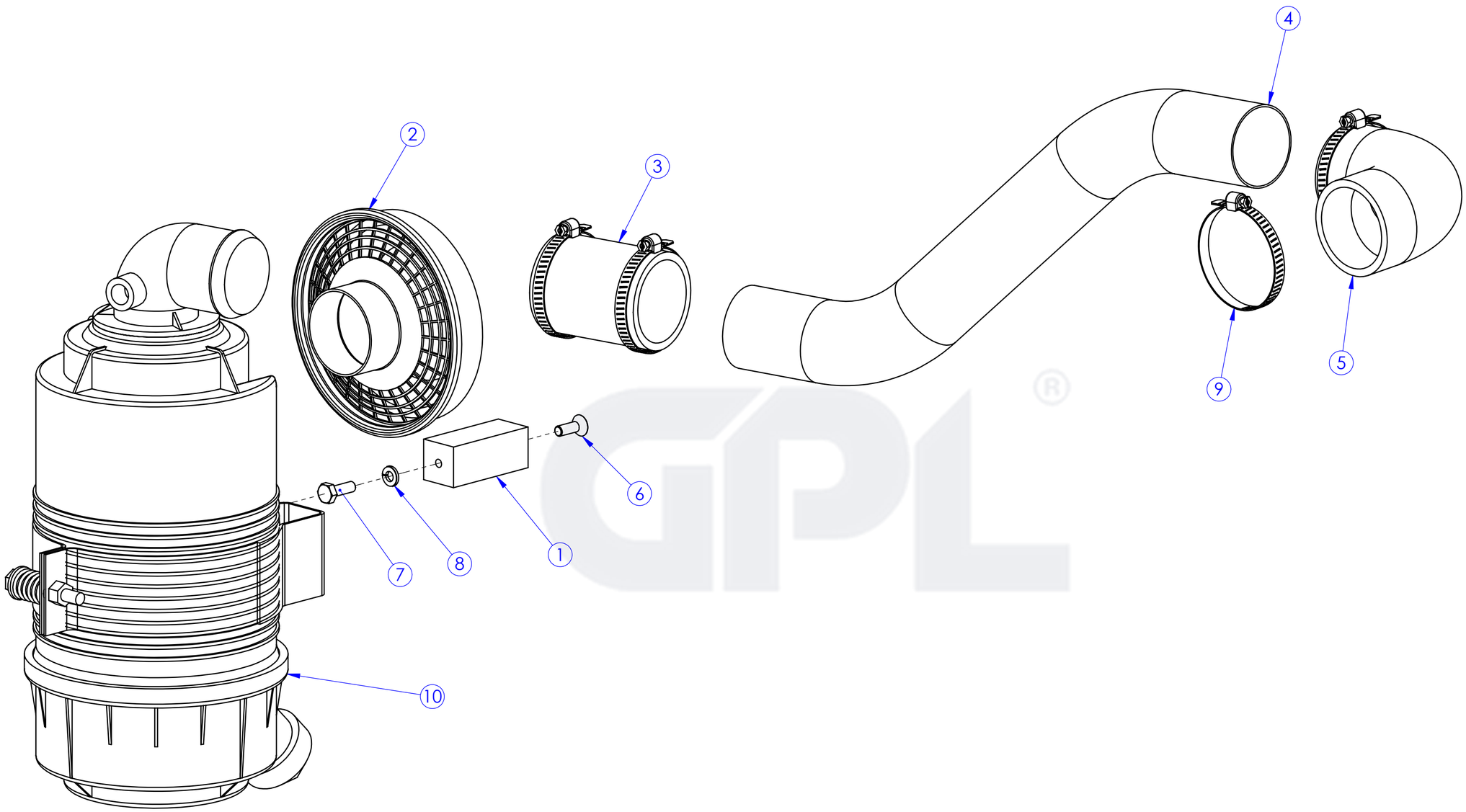

ITEM NO.	PART NUMBER	DESCRIPTION	QTY.
1	505793301	BLOCK, AIR CLEANER MOUNT	1
2	505836301	HOOD, AIR CLEANER, KOHLER	1
3	575654203	HOSE, INTAKE 2"ID X 3"	1
4	505791801	INTAKE TUBE	1
5	505745002	ELBOW, AIR CLEANER, KOHLER	1
6	505628601	FHS, 1/4-20 x 3/4 S.S.	1
7	505627501	HHB 1/4-20 X .75 S.S.	1
8	505632801	WASHER, SPLIT 1/4" S.S.	1
9	505776001	HOSE CLAMP, 2 1/2" DIA	4
10	505836101	KOHLER AIR CLEANER	1

SUB-ASSEMBLY BILL OF MATERIAL

SOFF-CUT INT'L, INC. CLAIMS PROPRIETARY RIGHTS TO THE MATERIAL DISCLOSED IN THIS DOCUMENT. THIS DOCUMENT IS PROVIDED IN CONFIDENCE AND MAY NOT BE REPRODUCED OR DISCLOSED WITHOUT WRITTEN PERMISSION FROM SOFF-CUT INT'L. © COPYRIGHT 2007, SOFF-CUT INT'L, INC. ALL RIGHTS RESERVED.

ASSEMBLY	GAS SAW
KIT, OIL DRAIN	GX4200

505857507

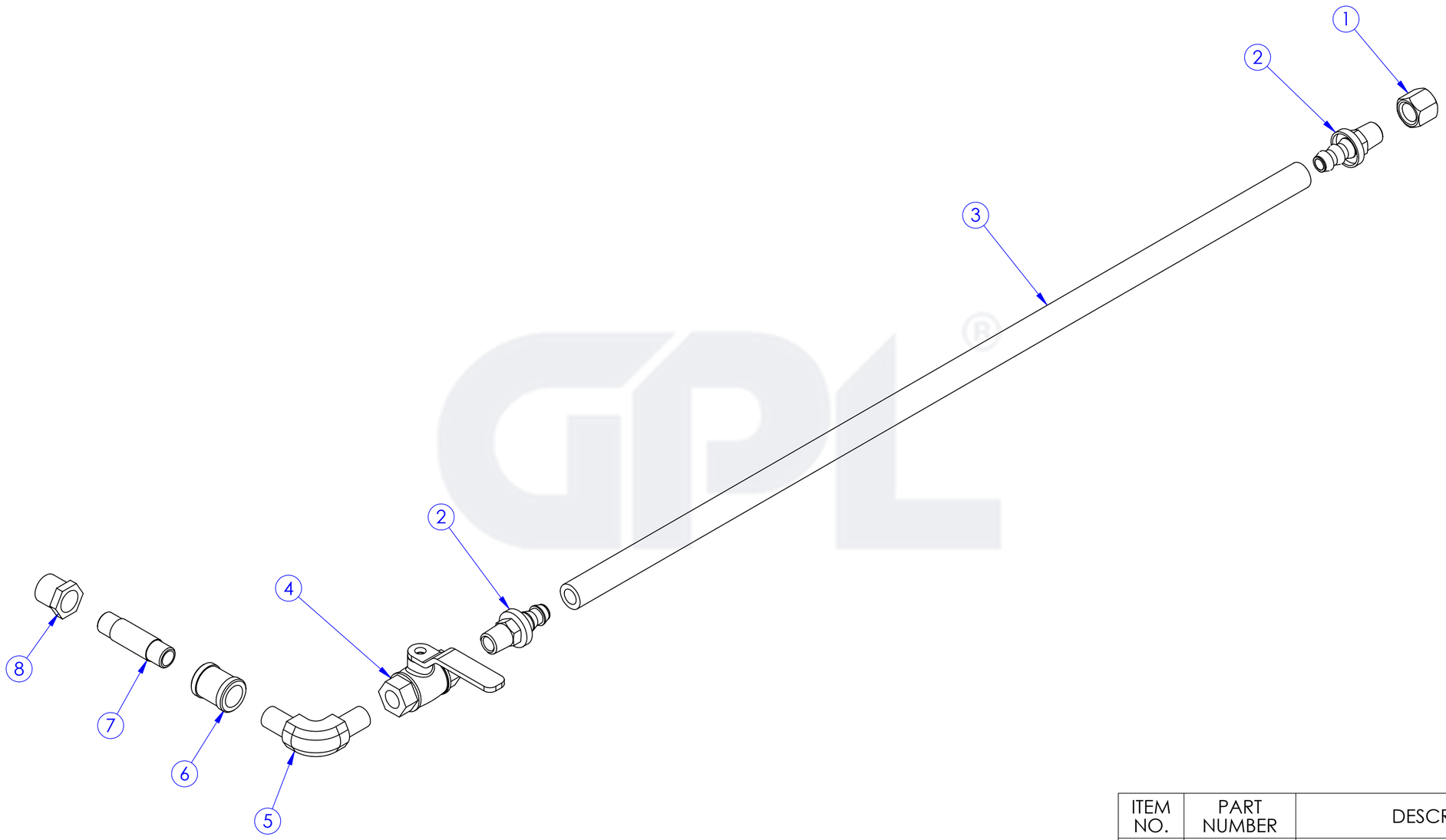

ITEM NO.	PART NUMBER	DESCRIPTION	QTY.
1	505776601	CAP, OIL DRAIN	1
2	505738601	FITTING, OIL DRAIN BARB	2
3	505738501	HOSE, OIL DRAIN	1
4	505738901	BALL VALVE	1
5	505738701	ELBOW, 90 DEG 1/4 NPT / 1/4 NPT	1
6	505796601	COUPLING, 1/4"NPT-1/4"NPT	1
7	505796501	NIPPLE, 1/4"NPT X 2"L BRASS	1
8	505796401	HEX BUSHING, 3/8"NPT TO 1/4"NPT	1

SUB-ASSEMBLY BILL OF MATERIAL

SOFF-CUT INT'L, INC. CLAIMS PROPRIETARY RIGHTS TO THE MATERIAL DISCLOSED IN THIS DOCUMENT. THIS DOCUMENT IS PROVIDED IN CONFIDENCE AND MAY NOT BE REPRODUCED OR DISCLOSED WITHOUT WRITTEN PERMISSION FROM SOFF-CUT INT'L. © COPYRIGHT 2007, SOFF-CUT INT'L, INC. ALL RIGHTS RESERVED.

SOFF-CUT INTERNATIONAL, INC.

ASSEMBLY	GAS SAW
EXHAUST SYSTEM ASSEMBLY	GX4200

574720502

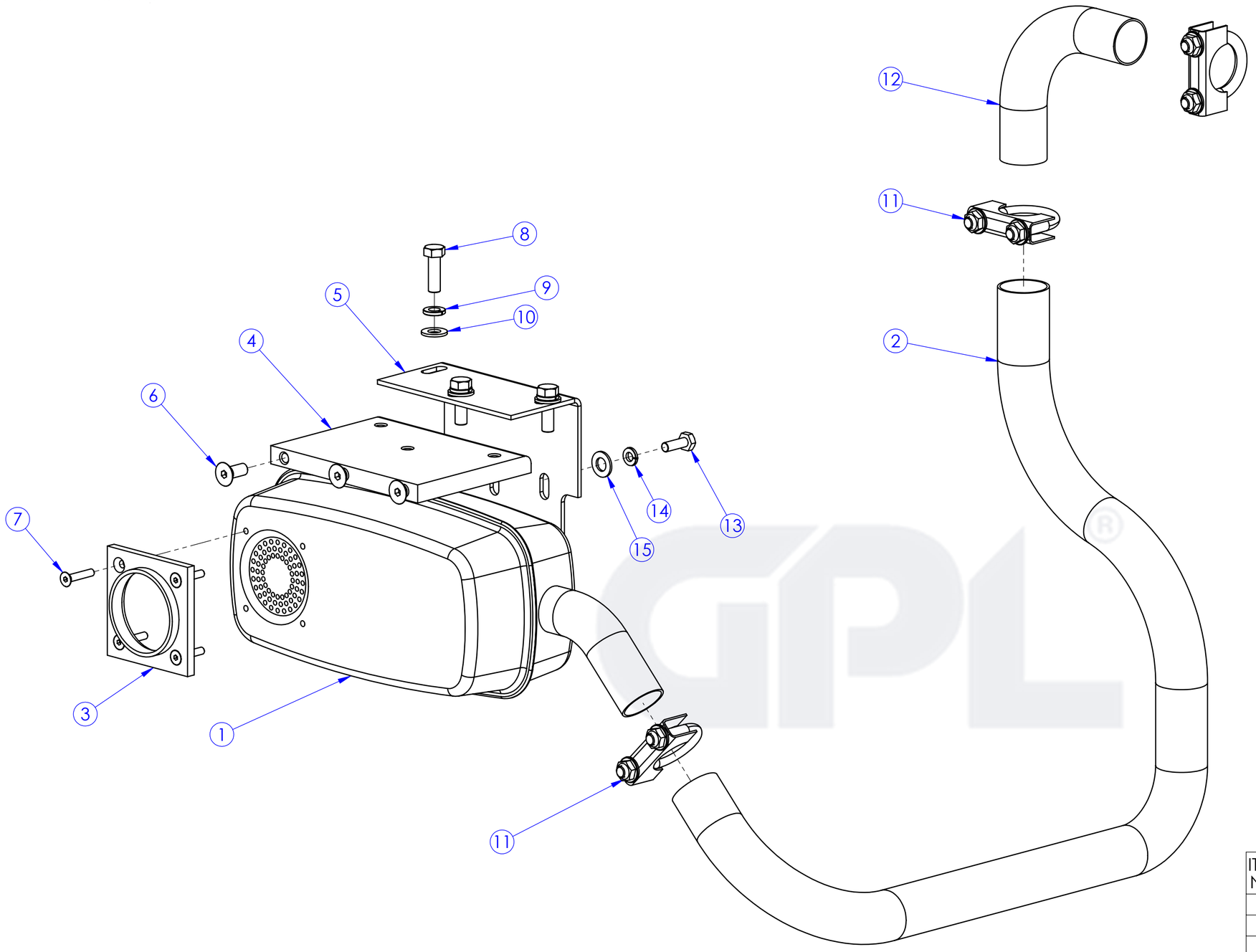

ITEM NO.	PART NUMBER	DESCRIPTION	QTY.
1	505797201	MUFFLER W/ ELBOW, KOHLER 23HP	1
2	505796801	HOSE, EXHAUST, SS 1 1/4"ID	1
3	505792801	SPACER, EXHAUST	1
4	505792901	PLATE, MOUNT, MUFFLER	1
5	505767302	BRACKET, MUFFLER, GX4200	1
6	505628801	FHS, 5/16-18 x 3/4 S.S.	3
7	505730001	FHS, 10-32 x 1 S.S.	4
8	505727501	HHB 5/16-18 X 1	3
9	505633001	WASHER, SPLIT 5/16" S.S.	3
10	505632101	WASHER, 5/16" FLAT SAE CAD	3
11	505743201	CLAMP ASSEMBLY, 1 1/8"	3
12	505797301	ELBOW, EXHAUST, GX4200	1
13	505627501	HHB 1/4-20 X .75 S.S.	4
14	505632801	WASHER, SPLIT 1/4" S.S.	4
15	505725501	WASHER, 1/4" FLAT SAE ZINC	4

SUB-ASSEMBLY BILL OF MATERIAL

SOFF-CUT INT'L, INC. CLAIMS PROPRIETARY RIGHTS TO THE MATERIAL DISCLOSED IN THIS DOCUMENT. THIS DOCUMENT IS PROVIDED IN CONFIDENCE AND MAY NOT BE REPRODUCED OR DISCLOSED WITHOUT WRITTEN PERMISSION FROM SOFF-CUT INT'L. © COPYRIGHT 2007, SOFF-CUT INT'L, INC. ALL RIGHTS RESERVED.

ASSEMBLY	GAS SAW
BLADE IDLER PULLEY	GX4200

510271702

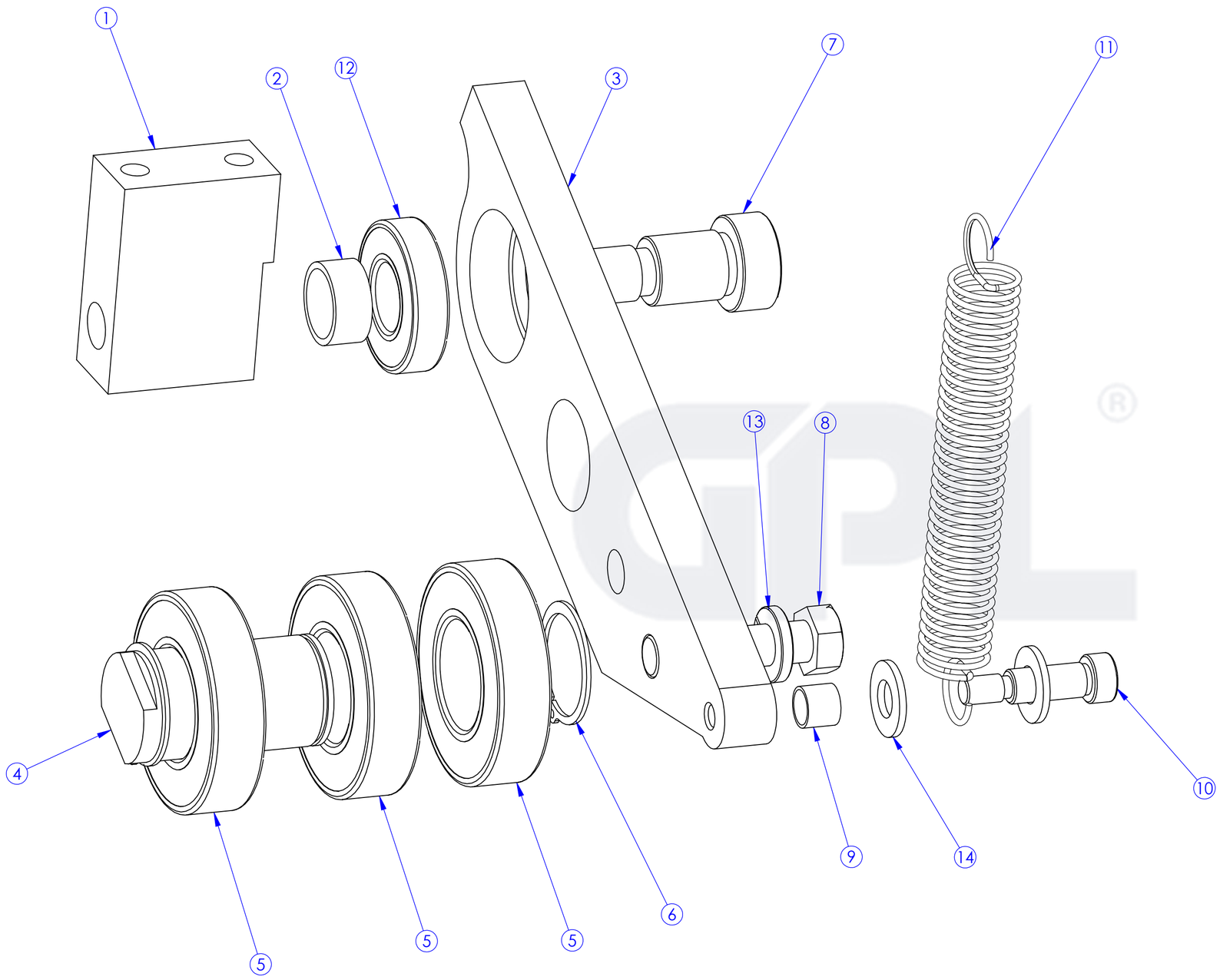

ITEM NO.	PART NUMBER	DESCRIPTION	QTY.
1	505714801	BLOCK, IDLER MOUNT	1
2	505714602	SPACER, .625"ID X .350"L ALUM.	1
3	505706901	PUMP ARM IDLER PULLEY	1
4	505706801	SHAFT, BLADE BELT TENSIONER	1
5	505736301	BEARING, 1.00 ID, R16-2RS	3
6	505733401	SNAP RING, EXT 1.000"	2
7	505726201	SHSB, 5/8 x 3/4	1
8	505795801	HHB 3/8-16 X 1 1/2 GR8	1
9	505717901	SPACER, .313"ID X .315"L G.A.	1
10	505726401	SHSB, 5/16 X 3/4	1
11	505796901	SPRING, EXTENSION	1
12	505736001	BEARING, .625 ID, R10-2RS	1
13	505731001	WASHER, SPLIT 3/8" S.S.	1
14	505632101	WASHER, 5/16" FLAT SAE CAD	2

SUB-ASSEMBLY BILL OF MATERIAL

SOFF-CUT INT'L, INC. CLAIMS PROPRIETARY RIGHTS TO THE MATERIAL DISCLOSED IN THIS DOCUMENT. THIS DOCUMENT IS PROVIDED IN CONFIDENCE AND MAY NOT BE REPRODUCED OR DISCLOSED WITHOUT WRITTEN PERMISSION FROM SOFF-CUT INT'L. © COPYRIGHT 2007, SOFF-CUT INT'L, INC. ALL RIGHTS RESERVED.

ASSEMBLY	GAS SAW
PUMP IDLER PULLEY	GX4200

510271802

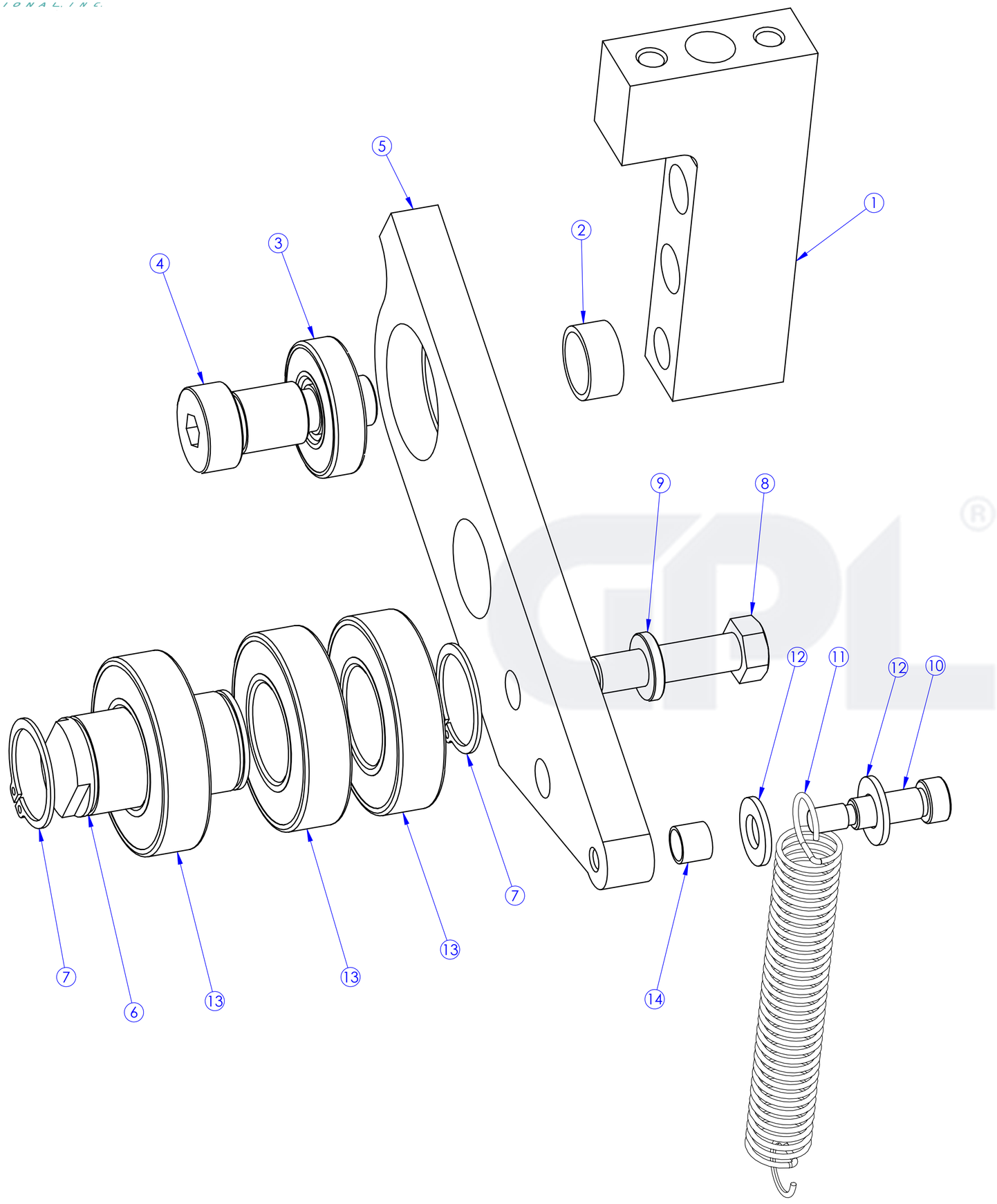

ITEM NO.	PART NUMBER	DESCRIPTION	QTY.
1	505714401	BLOCK, IDLER MOUNT	1
2	505714602	SPACER, .625"ID X .350"L ALUM.	1
3	505736001	BEARING, .625 ID, R10-2RS	1
4	505726201	SHSB, 5/8 x 3/4	1
5	505706901	PUMP ARM IDLER PULLEY	1
6	505706801	SHAFT, BLADE BELT TENSIONER	1
7	505733401	SNAP RING, EXT 1.000"	2
8	505795801	HHB 3/8-16 X 1 1/2 GR8	1
9	505731001	WASHER, SPLIT 3/8" S.S.	1
10	505726401	SHSB, 5/16 X 3/4	1
11	505774601	SPRING, EXTENSION	1
12	505632101	WASHER, 5/16" FLAT SAE CAD	2
13	505736301	BEARING, 1.00 ID, R16-2RS	3
14	505717901	SPACER, .313"ID X .315"L G.A.	1

SUB-ASSEMBLY BILL OF MATERIAL

SOFF-CUT INT'L, INC. CLAIMS PROPRIETARY RIGHTS TO THE MATERIAL DISCLOSED IN THIS DOCUMENT. THIS DOCUMENT IS PROVIDED IN CONFIDENCE AND MAY NOT BE REPRODUCED OR DISCLOSED WITHOUT WRITTEN PERMISSION FROM SOFF-CUT INT'L. © COPYRIGHT 2007, SOFF-CUT INT'L, INC. ALL RIGHTS RESERVED.

ASSEMBLY	GAS SAW
BLADE SHAFT ASSEMBLY	GX4200

510272202

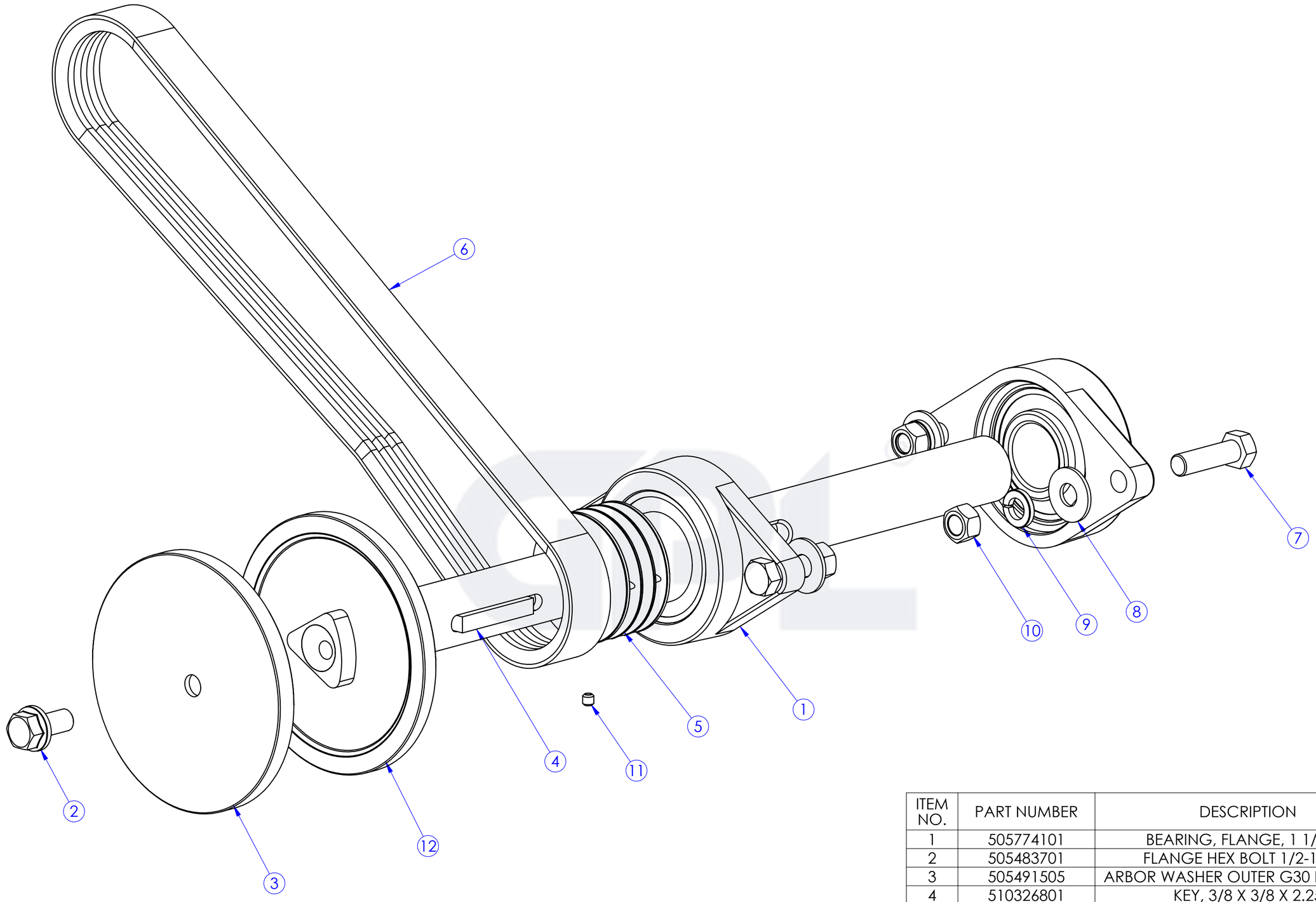

ITEM NO.	PART NUMBER	DESCRIPTION	QTY.
1	505774101	BEARING, FLANGE, 1 1/2" ID	2
2	505483701	FLANGE HEX BOLT 1/2-13 X 1	1
3	505491505	ARBOR WASHER OUTER G30 NEW STYLE	1
4	510326801	KEY, 3/8 X 3/8 X 2.25	1
5	505777301	SHEAVE, 3/3V 3.00 OD X 1.50 ID	1
6	505777401	BELT, 3/3VX450	1
7	505727001	HHB 1/2-20 X 1 3/4 GR8	4
8	505731401	WASHER, 1/2" FLAT S.S.	4
9	505731101	WASHER, SPLIT 1/2" S.S.	4
10	505732201	NUT, 1/2-20 HEX, GR5 ZINC	4
11	505733802	SET SCREW, KNURLED .250-20 X .250	4
12	505573204	BLADE SHAFT	1

SUB-ASSEMBLY BILL OF MATERIAL

SOFF-CUT INT'L, INC. CLAIMS PROPRIETARY RIGHTS TO THE MATERIAL DISCLOSED IN THIS DOCUMENT. THIS DOCUMENT IS PROVIDED IN CONFIDENCE AND MAY NOT BE REPRODUCED OR DISCLOSED WITHOUT WRITTEN PERMISSION FROM SOFF-CUT INT'L. © COPYRIGHT 2007, SOFF-CUT INT'L, INC. ALL RIGHTS RESERVED.

ASSEMBLY	GAS SAW
FRONT WHEEL CARRIAGE	GX4200

510271402

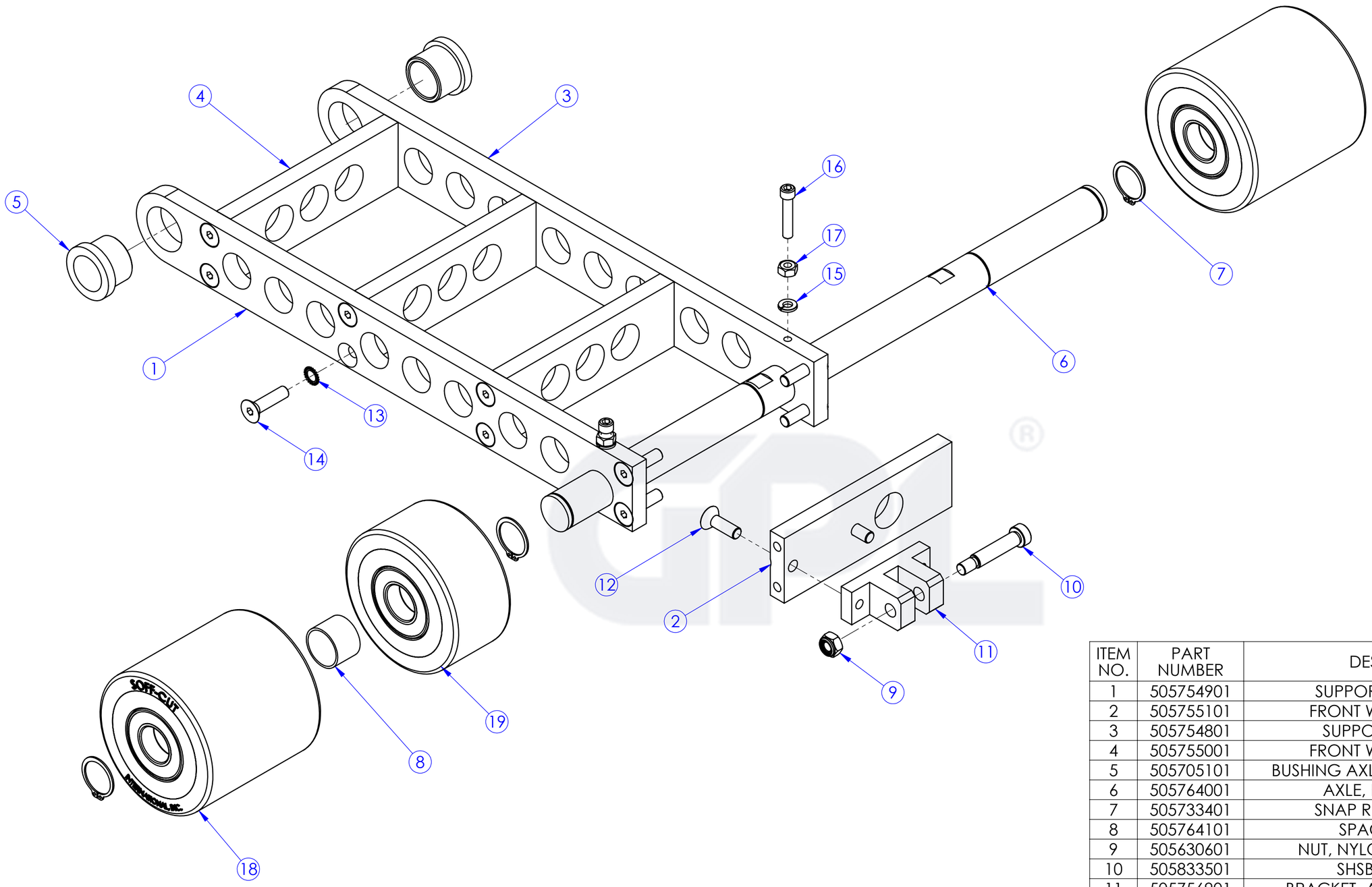

ITEM NO.	PART NUMBER	DESCRIPTION	QTY.
1	505754901	SUPPORT, FWC, RIGHT	1
2	505755101	FRONT WHEEL BRACKET	1
3	505754801	SUPPORT, FWC, LEFT	1
4	505755001	FRONT WHEEL BRACKET	3
5	505705101	BUSHING AXLE SUPPORT (DELRIN)	2
6	505764001	AXLE, FRONT WHEEL	1
7	505733401	SNAP RING, EXT 1.000"	1
8	505764101	SPACER, WHEEL	1
9	505630601	NUT, NYLOC, 5/16-18 CAD	1
10	505833501	SHSB, 3/8 x 1 1/2	1
11	505756901	BRACKET, ACTUATOR MOUNT	1
12	505730101	FHS, 5/16-18 x 1 S.S.	2
13	505686301	LOCKWASHER, C'SUNK 5/16 EXT TOOTH	16
14	505773301	FHS, 5/16-18 x 1 1/4 S.S.	16
15	505632801	WASHER, SPLIT 1/4" S.S.	2
16	505628001	SHCS 1/4-20 X 1 1/4 S.S.	2
17	505631901	NUT, 1/4-20 HEX, S.S.	2
18	505869101	WHEEL ASSY, FRONT, 4"D X 4"W	2
19	505869201	WHEEL ASSY, FRONT, 4"D X 2"W	1

SUB-ASSEMBLY BILL OF MATERIAL

SOFF-CUT INT'L. INC. CLAIMS PROPRIETARY RIGHTS TO THE MATERIAL DISCLOSED IN THIS DOCUMENT. THIS DOCUMENT IS PROVIDED IN CONFIDENCE AND MAY NOT BE REPRODUCED OR DISCLOSED WITHOUT WRITTEN PERMISSION FROM SOFF-CUT INT'L. © COPYRIGHT 2007, SOFF-CUT INT'L, INC. ALL RIGHTS RESERVED.

SOFF-CUT INTERNATIONAL, INC.

ASSEMBLY	GAS SAW
PUMP ASSEMBLY	GX4200

510271902

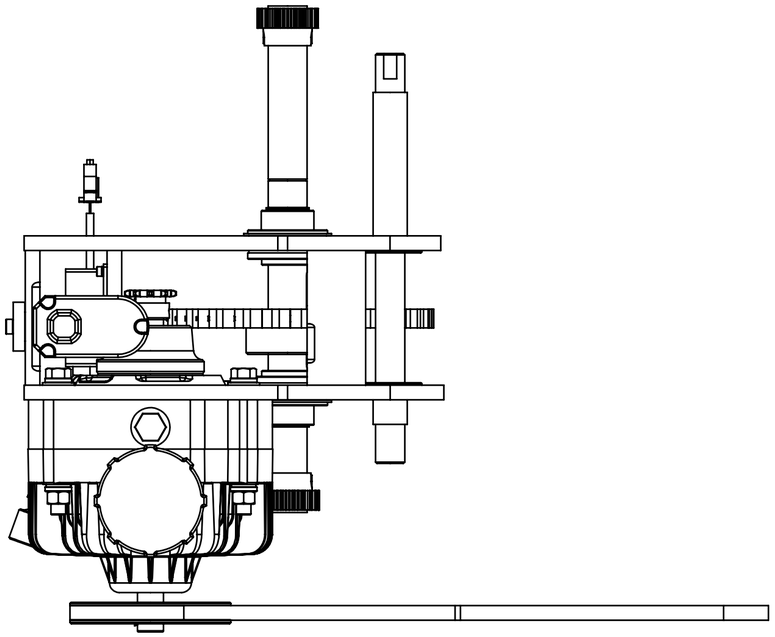

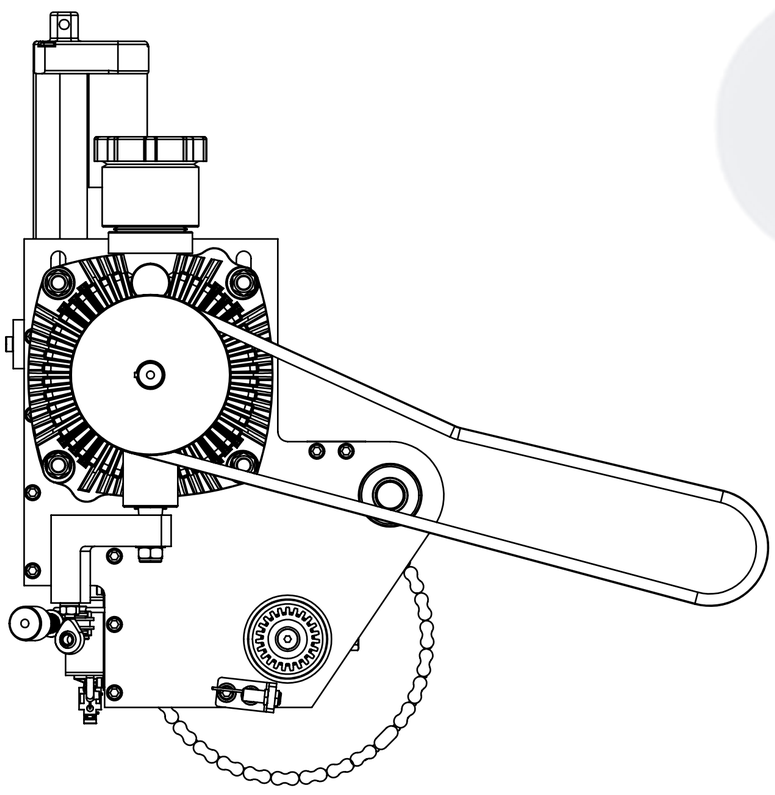

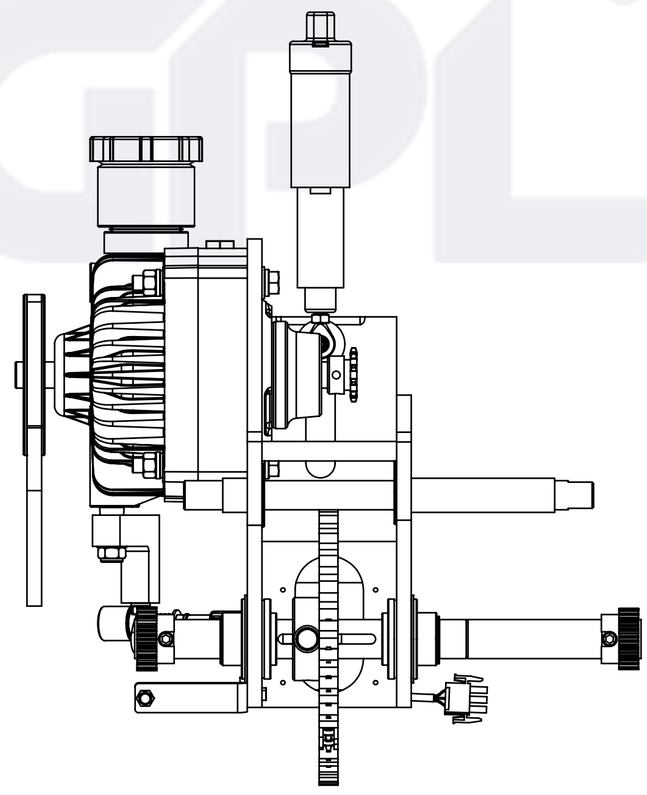

ITEM NO.	PART NUMBER	DESCRIPTION	QTY.
1	505756501	PLATE, PUMP SUPPORT, RIGHT	1
2	505756601	PUMP BRACE	1
3	505607601	PLATE, PUMP SUPPORT, LEFT	1
4	505706101	PLATE, PUMP BRACE, REAR	1
5	505756801	PLATE, PUMP TOP BRACE	1
6	505738301	HYDROSTATIC PUMP	1
7	505736101	BEARING, .750 ID, R12-2RS	2
8	505764701	SHAFT, PUMP DRIVE	1
9	505777101	GEAR, 23T, S1623	1
10	505777001	GEAR, 24T, S1624	1
11	505739401	SPROCKET, 60-TOOTH	1
12	505765701	PUMP SUPPORT SHAFT	1
13	505765801	SPACER, .875"ID X .630"L, PUMP	1
14	505765601	SPACER. .875"ID X 3.675"L, PUMP	1
15	505764601	ARM, PUMP CONTROL	1
16	505691101	SHEAVE, 1/3V 4.12 OD X 17mm ID	1
17	505777501	BELT, PUMP 3L420	1
18	505732901	NUT, 1/4-28 HEX, GR5 ZINC	1
19	505732101	NUT, 3/8-16 HEX, GR5 ZINC	4
20	505732401	NUT, 5/16-18 HEX, S.S.	1
21	505632801	WASHER, SPLIT 1/4" S.S.	3
22	505731001	WASHER, SPLIT 3/8" S.S.	8
23	505633001	WASHER, SPLIT 5/16" S.S.	1
24	505743401	ROD END	1
25	505723401	NUT, NYLOC, 3/8-16	1
26	505630401	NUT, NYLOC, #10-24 CAD	1
27	505634201	WASHER, 3/8"X .03"THK FLAT S.S.	1
28	505724601	WASHER, 3/8" FLAT	4
29	505724001	WASHER, 3/8" FLAT S.S. AN 960	4
30	505632101	WASHER, 5/16" FLAT SAE CAD	1
31	505658501	ARM, PROX. SENSOR MOUNT	1
32	505754301	SENSOR, PROXIMITY (FPM/LINEAR FT)	1
33	505627801	SHCS 1/4-20 X 3/4 S.S.	19
34	505772701	SHCS 1/4-20 X 1/4 S.S.	4
35	505634401	WASHER, 1/4" DELRIN	3
36	505756701	SPACER, PUMP ACTUATOR	2
37	505726001	SHSB, 1/4 X 1 1/2	1
38	505727701	HHB 3/8-16 X 3.5	4
39	505727501	HHB 5/16-18 X 1	1
40	510318101	KEY, 1/4 X 1/4 X 1.50	1
41	505686201	LOCKWASHER, C'SUNK 1/4 EXT TOOTH	2
42	505628601	FHS, 1/4-20 x 3/4 S.S.	2
43	505764801	WASHER, DRIVE SHAFT END	2
44	505689401	BEARING, DRIVE SHAFT	2
45	505690201	RETAINING RING, 2" OD	2
46	505733401	SNAP RING, EXT 1.000"	2
47	505739501	CHAIN, ROLLER #35	1
48	505739601	CONNECTING LINK #35	1
49	505733801	SET SCREW, KNURLED .250-20 X .375	2
50	505734701	KEY, WOODRUFF, #3	2
51	505667401	SPROCKET, 10T	1
52	505845101	KIT, SPEED CONTROL ACTUATOR	1
53	505847101	KIT, PUMP ACTUATOR	1

SUB-ASSEMBLY BILL OF MATERIAL

SOFF-CUT INT'L, INC. CLAIMS PROPRIETARY RIGHTS TO THE MATERIAL DISCLOSED IN THIS DOCUMENT. THIS DOCUMENT IS PROVIDED IN CONFIDENCE AND MAY NOT BE REPRODUCED OR DISCLOSED WITHOUT WRITTEN PERMISSION FROM SOFF-CUT INT'L. © COPYRIGHT 2007, SOFF-CUT INT'L, INC. ALL RIGHTS RESERVED.

SOFF-CUT INTERNATIONAL, INC.

ASSEMBLY	GAS SAW
PUMP ASSEMBLY	GX4200

510271902

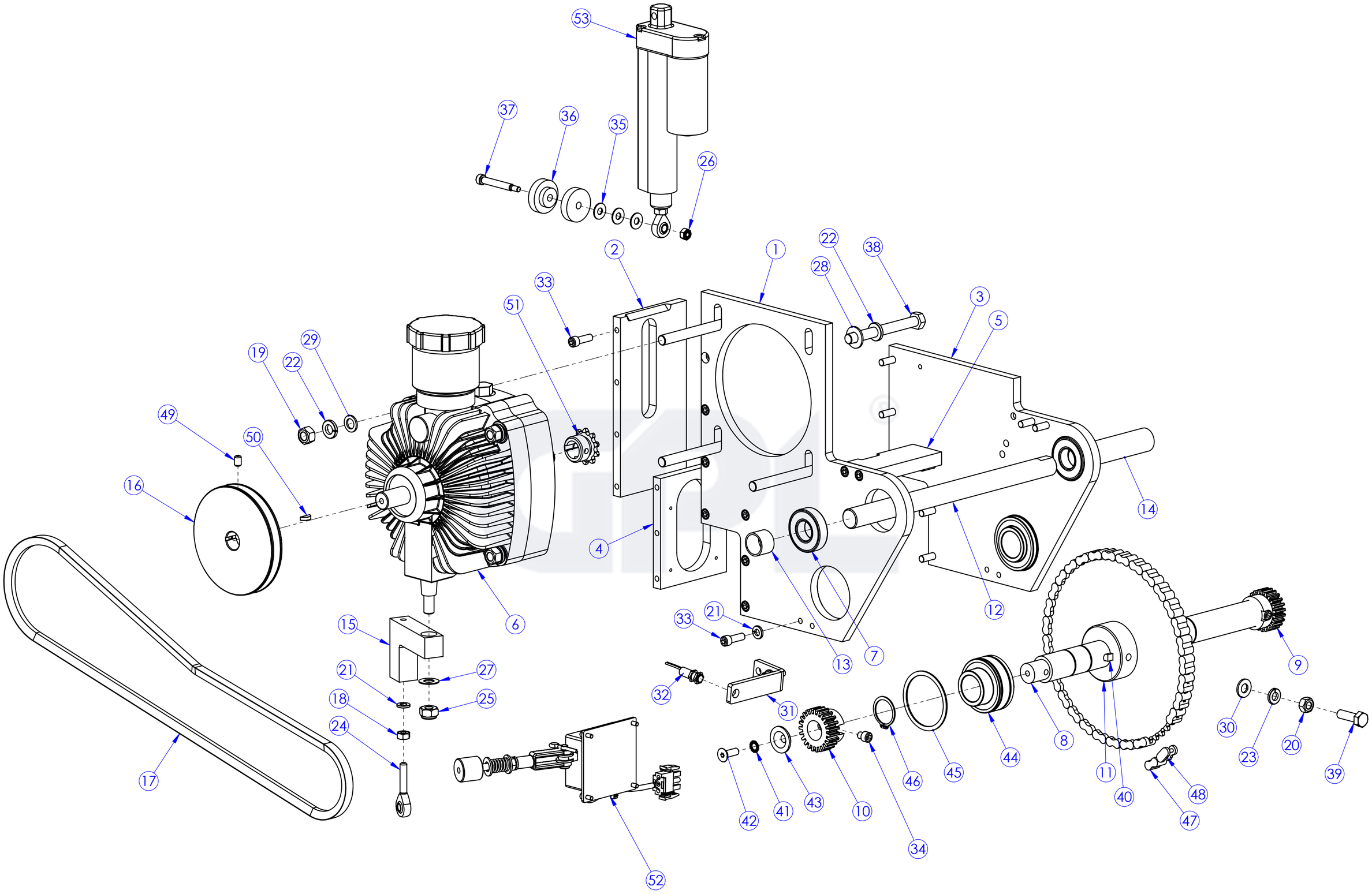

SUB-ASSEMBLY BILL OF MATERIAL

SOFF-CUT INT'L, INC. CLAIMS PROPRIETARY RIGHTS TO THE MATERIAL DISCLOSED IN THIS DOCUMENT. THIS DOCUMENT IS PROVIDED IN CONFIDENCE AND MAY NOT BE REPRODUCED OR DISCLOSED WITHOUT WRITTEN PERMISSION FROM SOFF-CUT INT'L. © COPYRIGHT 2007, SOFF-CUT INT'L, INC. ALL RIGHTS RESERVED.

SOFF-CUT INTERNATIONAL, INC.

ASSEMBLY	GAS SAW
KIT, SPEED CONTROL ACTUATOR	X2500, GX4200

505845101

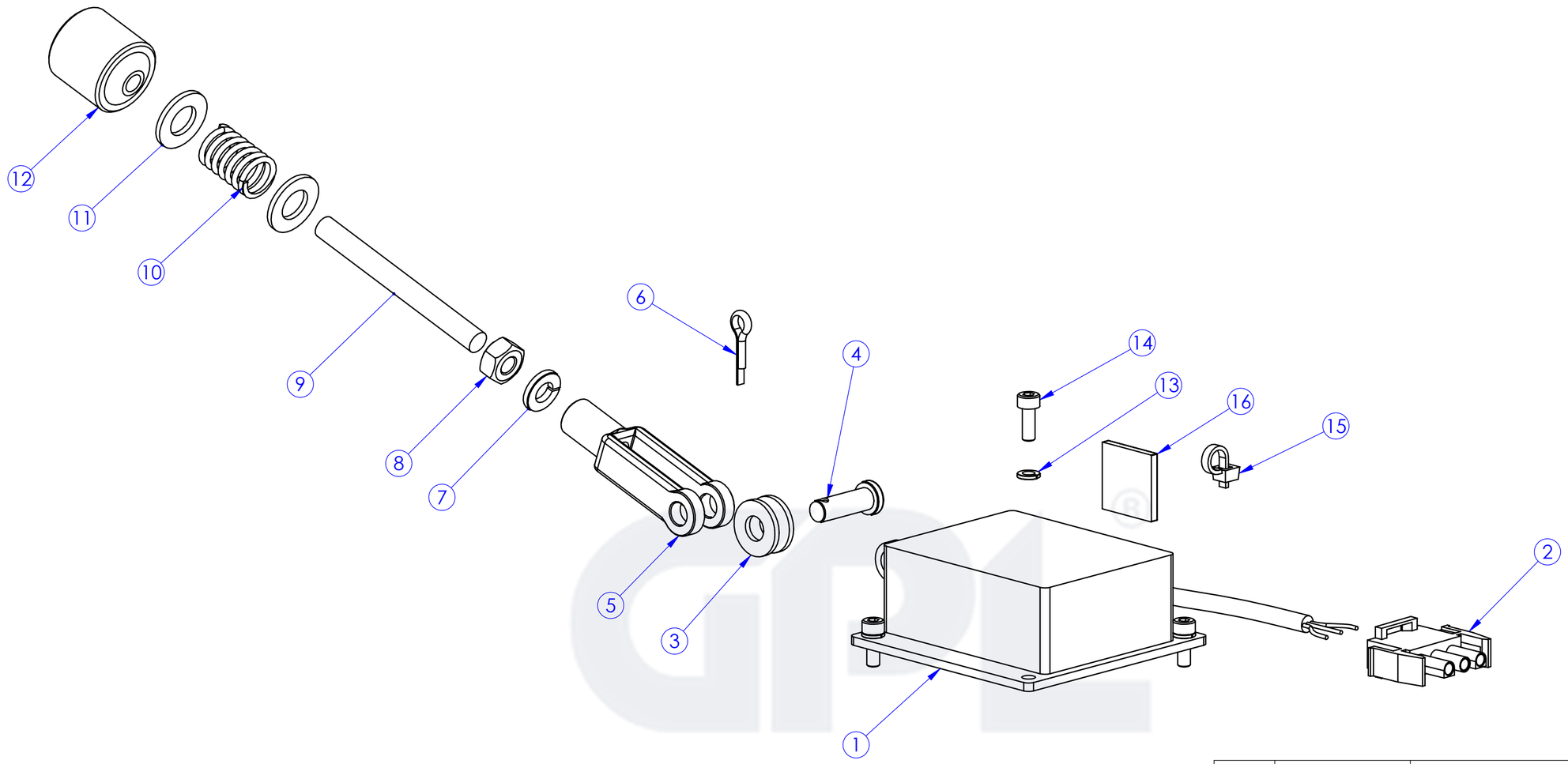

ITEM NO.	PART NUMBER	DESCRIPTION	QTY.
1	505749801	ACTUATOR, SPEED CONTROL	1
2	505751601	CONN 3 PIN PLUG	1
3	505632001	WASHER, 1/4" FLAT S.S.	2
4	505743501	CLEVIS FOR YOKE END	1
5	505743301	YOKE END, FEMALE THREADED	1
6	505739701	COTTER PIN, 3/32 X 1/2	1
7	505632801	WASHER, SPLIT 1/4" S.S.	1
8	505732901	NUT, 1/4-28 HEX, GR5 ZINC	1
9	505770801	STUD, 1/4-28 X 2 1/2	1
10	505775101	SPRING, #510	1
11	505725501	WASHER, 1/4" FLAT SAE ZINC	2
12	505755201	KNOB, PUMP ADJUSTER	1
13	505632401	WASHER, SPLIT #6 S.S.	4
14	505627601	SHCS 6-32 X 3/8 S.S.	4
15	510331701	TIE, CABLE	1
16	510337602	BASE, TY WRAP	1

SUB-ASSEMBLY BILL OF MATERIAL

SOFF-CUT INT'L, INC. CLAIMS PROPRIETARY RIGHTS TO THE MATERIAL DISCLOSED IN THIS DOCUMENT. THIS DOCUMENT IS PROVIDED IN CONFIDENCE AND MAY NOT BE REPRODUCED OR DISCLOSED WITHOUT WRITTEN PERMISSION FROM SOFF-CUT INT'L. © COPYRIGHT 2007, SOFF-CUT INT'L, INC. ALL RIGHTS RESERVED.

ITEM NO.	PART NUMBER	DESCRIPTION	QTY.
1	505712101	BLOCK, HANDLE SHAFT MNT	2
2	505763401	SHAFT, HANDLE PIVOT	1
3	505711801	ARM, HANDLE SUPPORT	2
4	505720901	RUBBER, ARM, HANDLE SUPPORT	2
5	505759501	HANDLE BAR RIGHT	1
6	505758601	CROSS BAR KEY DASH	1
7	505759401	HANDLE BAR LEFT	1
8	505793501	CONTROL PANEL	1
9	505758701	BOTTOM SUPPORT BRACE	1
10	505769801	RUBBER, BOTTOM SUPPORT BRACE	1
11	505708001	SPACER, SIDE COVER, LEFT	2
12	505711901	SIDE COVER, CONTROL PANEL	2
13	505695001	CHOKE CABLE	1
14	505605101	25 AMP. CIRCUIT BREAKER	1
15	505740901	KEY SWITCH, HONDA	1
16	505750201	TACHOMETER	1
17	505752801	LED, RED	2
18	505704301	VOLT/HOUR METER	1
19	505704401	E-STOP	1
20	505605001	COMBO METER/TOTALIZER	1
21	505746901	HANDLE BAR GRIP	2
22	505708301	SUPPORT BAR	1
23	505758501	CROSSBAR, KEY/DASH	1
24	505757901	PANEL, CONTROL, FRONT	1
25	505769701	RUBBER, PANEL, FRONT CONTROL	1
26	505757701	COVER, HANDLE FRONT	1
27	505769601	RUBBER, COVER, HANDLE FRONT	1
28	505757601	COVER, HANDLE ACTUATOR	1
29	505769501	RUBBER, COVER, HANDLE ACTUATOR	1
30	505757001	ACTUATOR BRACKET, HANDLE	1
31	505721501	JOINT PROTECTOR BAG	1
32	505736301	BEARING, 1.00 ID, R16-2RS	2
33	505736901	SHIM, 1" ID X 1.5" OD X .012" THK	1
34	505634401	WASHER, 1/4" DELRIN	2
35	505632701	WASHER, SPLIT #8 S.S.	2
36	505731701	LOCKWASHER, #8 EXT TOOTH	2
37	505628201	SHCS 8-32 X 1/2 S.S.	3
38	505633101	WASHER, SPLIT #10 S.S.	27
39	505627701	SHCS 10-32 X 3/8 S.S.	24
40	505772801	SHCS 10-32 X 7/8 BLK	3
41	505635301	WASHER, #10 FLAT S.S.	3
42	505630401	NUT, NYLOC, #10-24 CAD	1
43	505726001	SHSB, 1/4 X 1 1/2	1
44	505729801	FHS, 10-24 x 1 1/4 S.S.	4
45	505729901	FHS, 10-32 x 1/2 S.S.	3
46	505632801	WASHER, SPLIT 1/4" S.S.	6
47	505632001	WASHER, 1/4" FLAT S.S.	2
48	505628001	SHCS 1/4-20 X 1 1/4 S.S.	6
49	505728801	SHCS 1/4-20 X 1 1/2 S.S.	3
50	505727401	HHB 1/4-20 X 1.25 GR8	4
51	505628601	FHS, 1/4-20 x 3/4 S.S.	13
52	505633001	WASHER, SPLIT 5/16" S.S.	4
53	505772501	SHCS 5/16-18 X 1 BLK	6
54	505627201	SHSB, 3/8 X 2 1/4	1
55	505630601	NUT, NYLOC, 5/16-18 CAD	1
56	505706601	BRACKET, ACTUATOR, ANGLED	1
57	505752701	TERMINAL BLOCK	1
58	505750701	SWITCH, ON / OFF / ON	5
59	505750801	SWITCH, ON / OFF	1
60	505844902	KIT, HANDLE ACTUATOR	1
61	575446601	KIT, GROUND WIRE, #10 TO 1/4" RING	1
62	575446602	KIT, GROUND WIRE, #10 TO F. PIN	5

SOFF-CUT INTERNATIONAL, INC.

ASSEMBLY	GAS SAW
CONTROL PANEL ASSEMBLY	GX4200

510272302

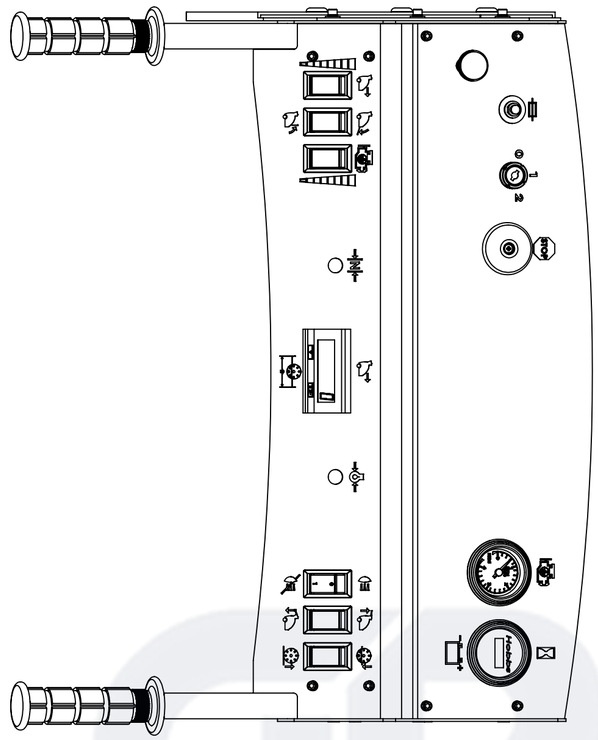

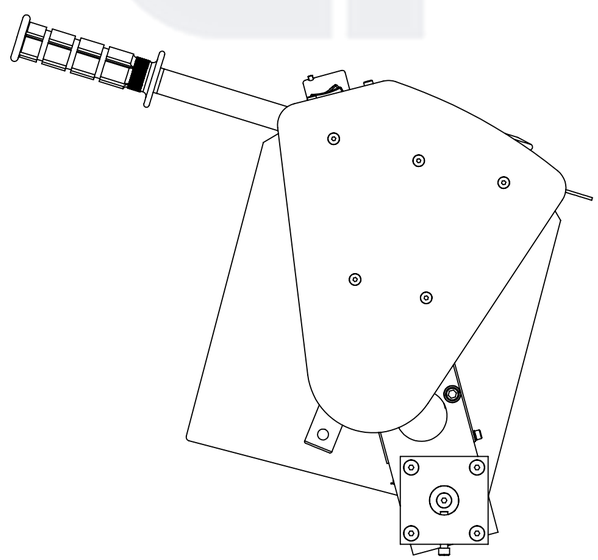

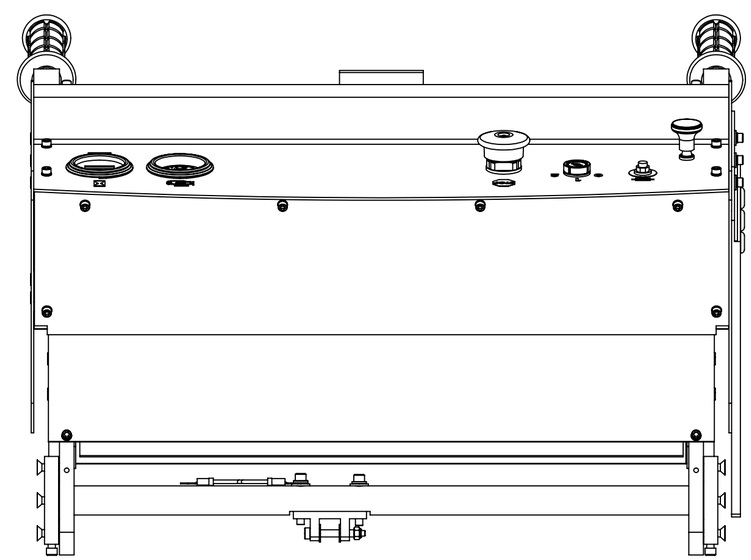

SUB-ASSEMBLY BILL OF MATERIAL

SOFF-CUT INT'L, INC. CLAIMS PROPRIETARY RIGHTS TO THE MATERIAL DISCLOSED IN THIS DOCUMENT. THIS DOCUMENT IS PROVIDED IN CONFIDENCE AND MAY NOT BE REPRODUCED OR DISCLOSED WITHOUT WRITTEN PERMISSION FROM SOFF-CUT INT'L. © COPYRIGHT 2007, SOFF-CUT INT'L, INC. ALL RIGHTS RESERVED.

SOFF-CUT INTERNATIONAL, INC.

ASSEMBLY	GAS SAW
CONTROL PANEL ASSEMBLY	GX4200

510272302

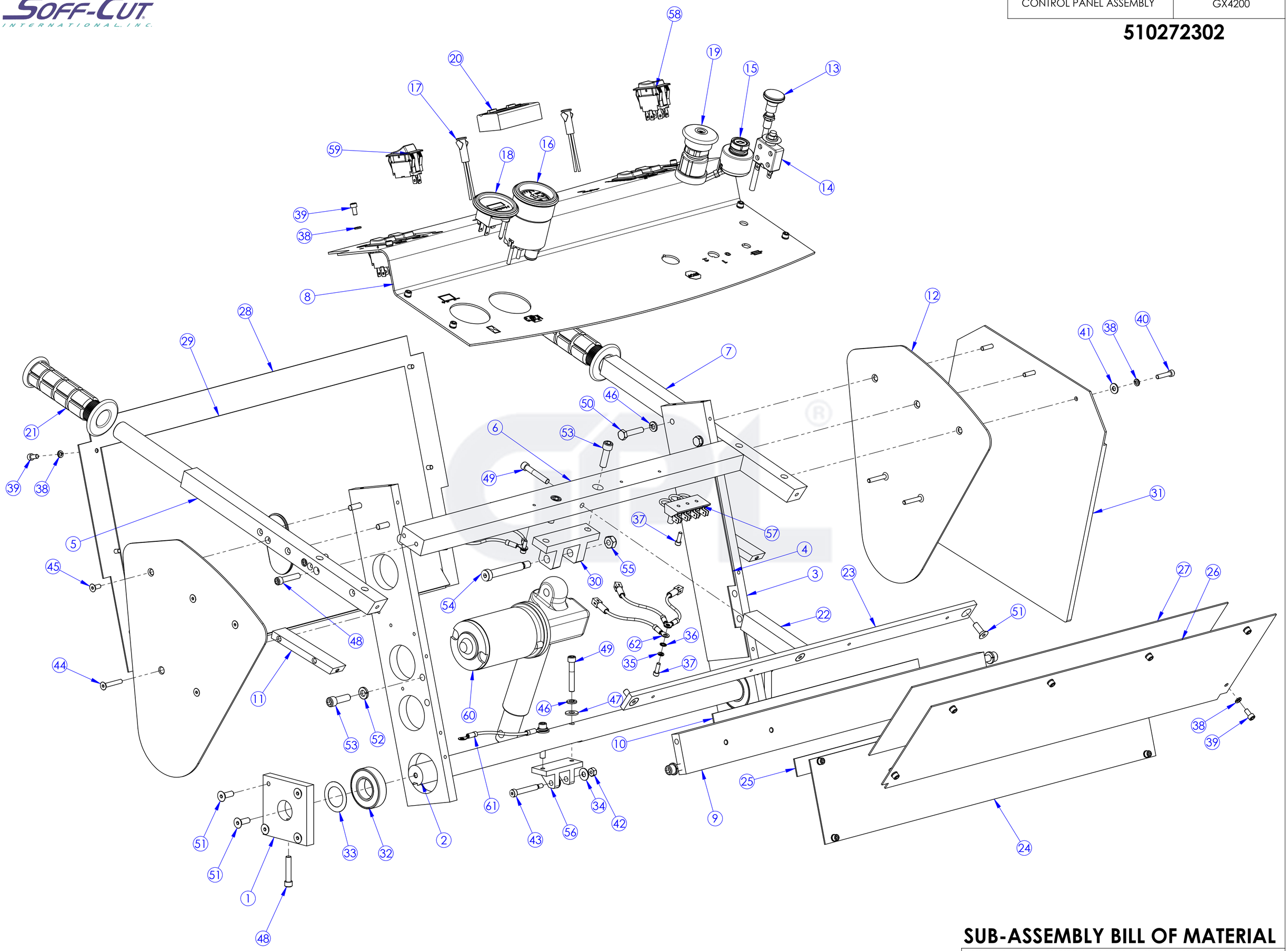

SUB-ASSEMBLY BILL OF MATERIAL

SOFF-CUT INT'L, INC. CLAIMS PROPRIETARY RIGHTS TO THE MATERIAL DISCLOSED IN THIS DOCUMENT. THIS DOCUMENT IS PROVIDED IN CONFIDENCE AND MAY NOT BE REPRODUCED OR DISCLOSED WITHOUT WRITTEN PERMISSION FROM SOFF-CUT INT'L. © COPYRIGHT 2007, SOFF-CUT INT'L, INC. ALL RIGHTS RESERVED.

SOFF-CUT INTERNATIONAL, INC.

510272102

ASSEMBLY: BLADE BLOCK ASSEMBLY

GAS SAW: GX4200

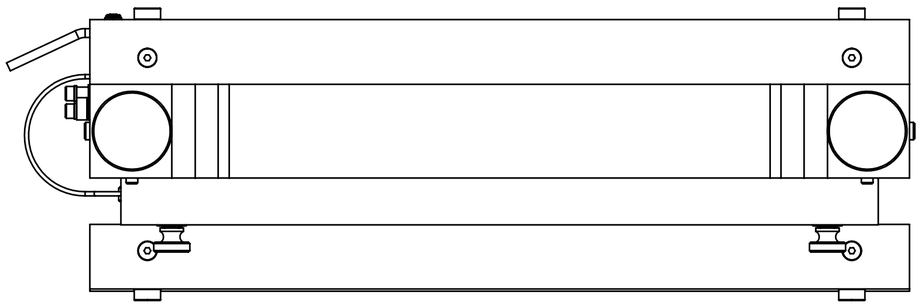

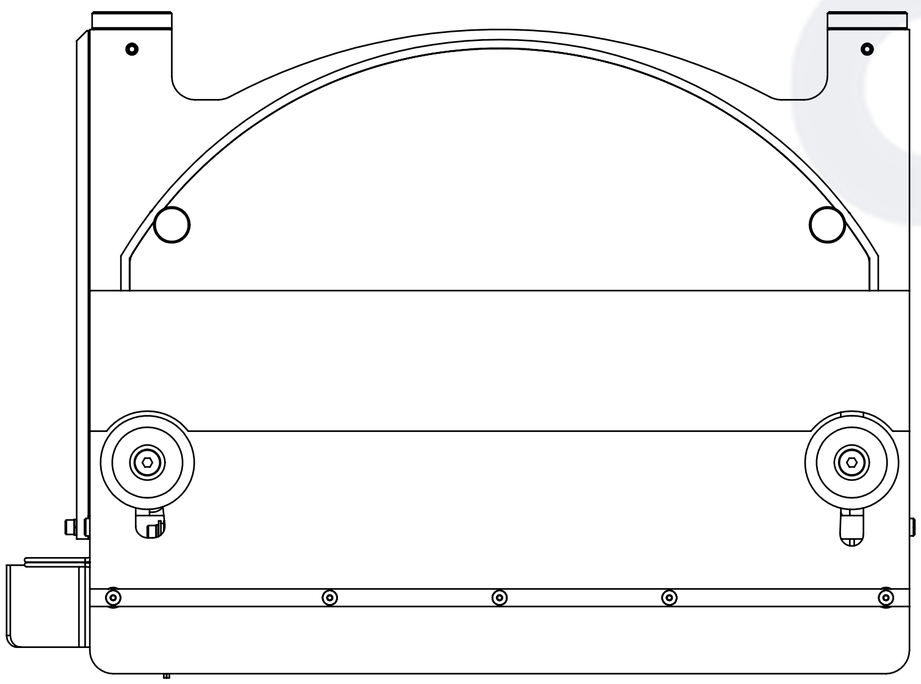

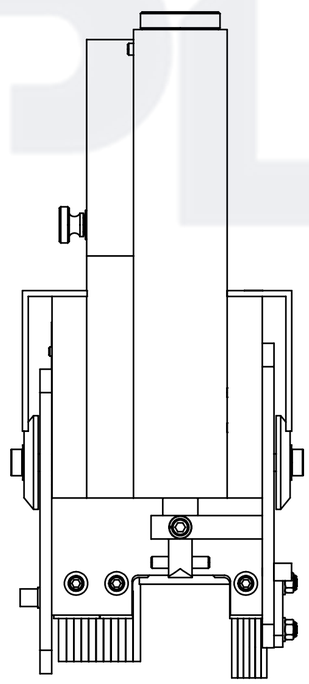

ITEM NO.	PART NUMBER	DESCRIPTION	510272102/QTY.
1	505788201	BLADE BLOCK	1
2	505789801	COVER PLATE, BELT ACCESS	1
3	505760701	SPACER, DEPTH POINTER	1
4	505760601	DEPTH POINTER	1
5	505789401	BLOCK, DIVERTER MTG, INNER	2
6	505762301	ANGLE BRACKET, BLADE BLOCK, INNER	1
7	505789001	PLATE, DIVERTER	1
8	505710301	BLOCK, FRONT DIVERTER	1
9	505789501	BLOCK, FRONT DIVERTER, SMALL	1
10	505762001	STEEL WIPER, BLADE BLOCK	2
11	505788801	PLATE, DIVERTER	1
12	505789601	BB ANGLE DIVERTER, LEFT	1
13	505789701	BB ANGLE DIVERTER, RIGHT	1
14	505795001	BB ANGLE DIVERTER, BACK	1
15	505759801	KNOB, BLADE BLOCK	2
16	505788701	ROD. BLADE BLOCK, REAR	1
17	505788601	ROD, BLADE BLOCK, FRONT	1
18	505790701	SPRING, BLADE BLOCK	2
19	505630001	SET SCREW, DOG .250-20 X .500 SS NT	2
20	505748301	INSERT, 1/2-13 X 5/16-18	2
21	505629101	BHS, 10-32 X 3/8 S.S.	10
22	505629501	BHS, 10-32 X 1/4 S.S.	4
23	505629801	BHS, 10-32 X 1/2 S.S.	4
24	505629301	BHS, 8-32 X 3/8 S.S.	5
25	505633101	WASHER, SPLIT #10 S.S.	26
26	505632701	WASHER, SPLIT #8 S.S.	5
27	505632801	WASHER, SPLIT 1/4" S.S.	2
28	505627301	HHB 1/4-20 X .375 S.S.	4
29	505731801	LOCKWASHER, 1/4 EXT TOOTH	4
30	505729601	SHCS 10-32 X 1/2 S.S.	3
31	505627701	SHCS 10-32 X 3/8 S.S.	3
32	505728701	SHCS 1/4-20 X 1 1/2 BLK	2
33	505772801	SHCS 10-32 X 7/8 BLK	2
34	505635301	WASHER, #10 FLAT S.S.	8
35	505724501	WASHER, 3/8"X .030"THK FLAT	2
36	505788901	REAR ANGLE DIVERTER	1
37	505768901	MONTING BAR, BIG RUBBER FLAP	1
38	505769001	LARGE DUST FLAP	2
39	505769101	MTG. BAR FOR RUBBER FLAPS SML	1
40	505769201	SMALL DUST FLAP	2
41	505789201	COVER, INNER LEXAN, GX4000	1
42	505761501	DIVERTOR, LEXAN COVER	1
43	505630401	NUT, NYLOC, #10-24 CAD	2
44	505772901	FHS, 10-24 x 3/4 S.S.	2
45	505729901	FHS, 10-32 x 1/2 S.S.	2
46	505730001	FHS, 10-32 x 1 S.S.	4
47	505627101	SHSB, 3/8 x 5/8	2
48	505761701	WASHER, LEXAN	2
49	505789901	STIFFENER, LEXAN COVER	1
50	505738001	DUST SEAL, 3/4" SHAFT	2
51	505774001	DOWEL PIN .250 X 1.25 STEEL	1
52	505760801	BLOCK, REAR SHAFT, BLADE BLOCK	1
53	505788501	SHAFT, BLADE BLOCK, FRONT	1
54	505748401	SNAP RING, SPIRAL .750"	2
55	505667801	3/4 ID X 1 OD X 2 1/2 BUSHING	2
56	505734101	SET SCREW, CONE .250-20 X .500	4
57	505760201	CLAMP, REAR BLADE SHAFT	1
58	505788401	SHAFT, BLADE BLOCK, REAR	1
59	505775401	SNAPPER PIN, 1/4" X 2 1/2"	1
60	574234902	BLADE BLOCK COVER ASSEMBLY	1

Form No. SCI-0005 Rev. B 02/2007

SUB-ASSEMBLY BILL OF MATERIAL

SOFF-CUT INT'L. INC. CLAIMS PROPRIETARY RIGHTS TO THE MATERIAL DISCLOSED IN THIS DOCUMENT. THIS DOCUMENT IS PROVIDED IN CONFIDENCE AND MAY NOT BE REPRODUCED OR DISCLOSED WITHOUT WRITTEN PERMISSION FROM SOFF-CUT INT'L. © COPYRIGHT 2007, SOFF-CUT INT'L, INC. ALL RIGHTS RESERVED.

SOFF-CUT INTERNATIONAL, INC.

ASSEMBLY	GAS SAW
BLADE BLOCK ASSEMBLY	GX4200

510272102

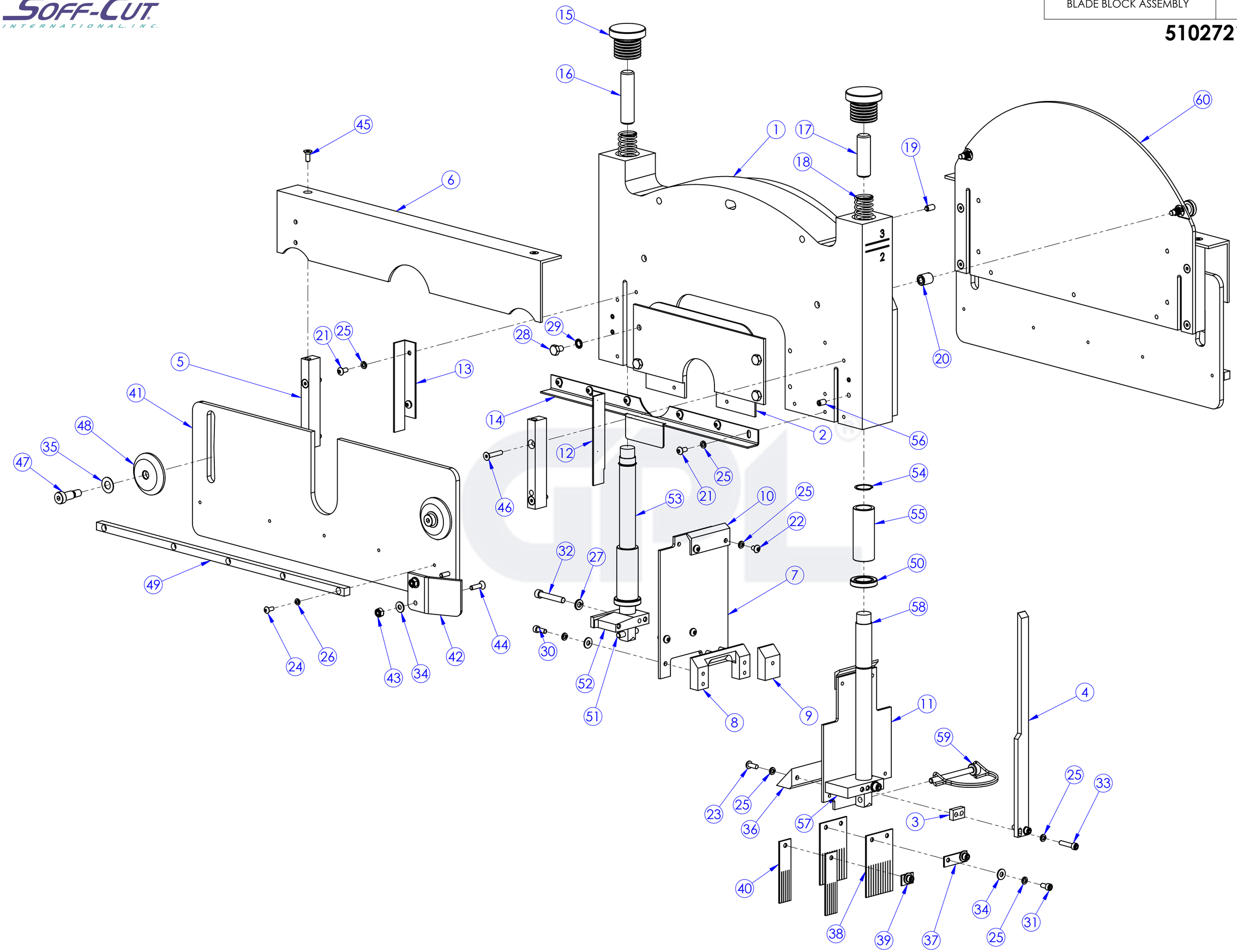

SUB-ASSEMBLY BILL OF MATERIAL

SOFF-CUT INT'L, INC. CLAIMS PROPRIETARY RIGHTS TO THE MATERIAL DISCLOSED IN THIS DOCUMENT. THIS DOCUMENT IS PROVIDED IN CONFIDENCE AND MAY NOT BE REPRODUCED OR DISCLOSED WITHOUT WRITTEN PERMISSION FROM SOFF-CUT INT'L. © COPYRIGHT 2007, SOFF-CUT INT'L, INC. ALL RIGHTS RESERVED.

SOFF-CUT INTERNATIONAL, INC.

ASSEMBLY	GAS SAW
BLADE BLOCK COVER ASSEMBLY	GX4200

574234902

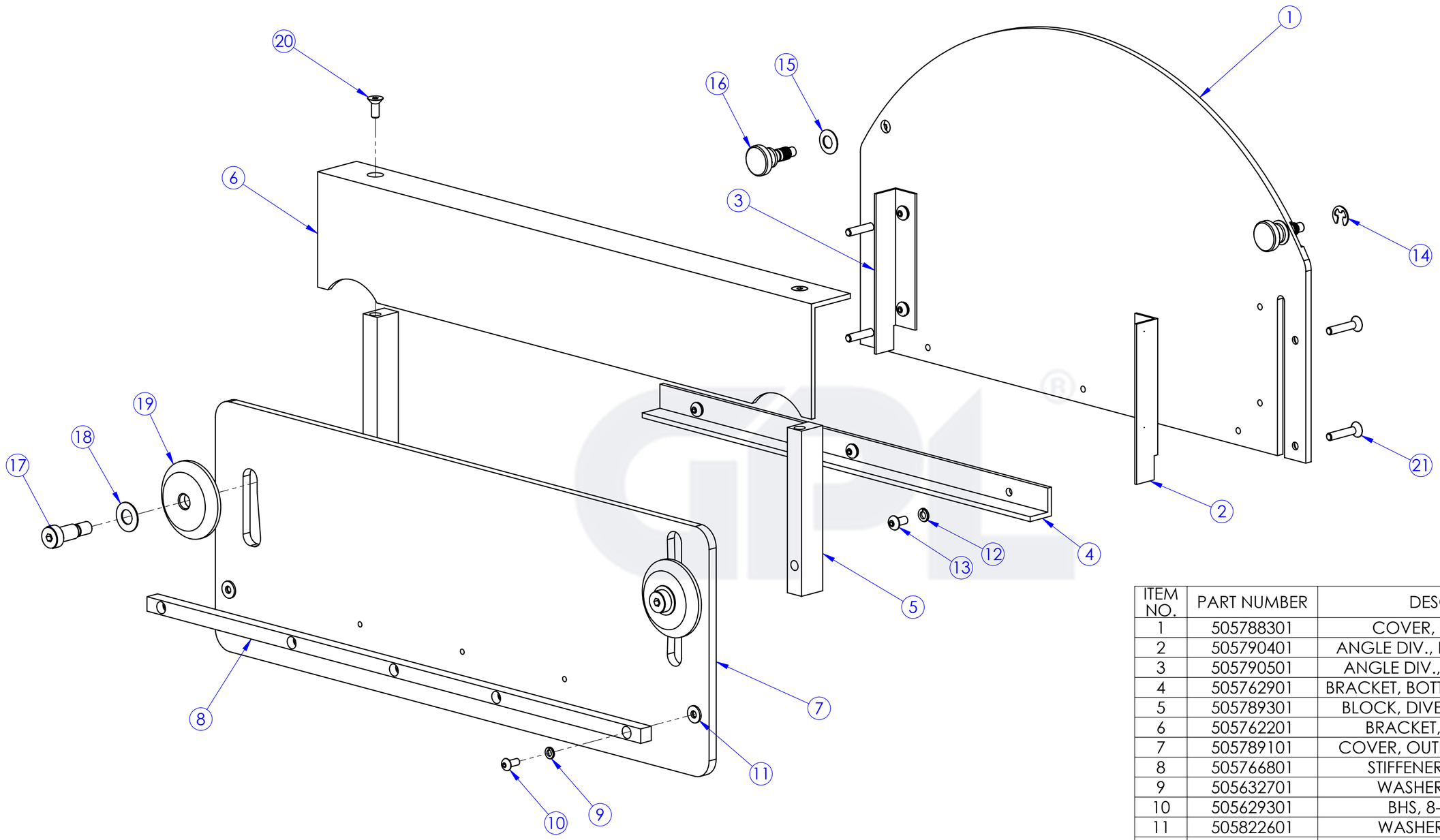

ITEM NO.	PART NUMBER	DESCRIPTION	QTY.
1	505788301	COVER, BLADE BLOCK	1
2	505790401	ANGLE DIV., BLD COVER, RIGHT	1
3	505790501	ANGLE DIV., BLD COVER, LEFT	1
4	505762901	BRACKET, BOTTOM, BLADE COVER	1
5	505789301	BLOCK, DIVERTER MTG, OUTER	2
6	505762201	BRACKET, OUTER ANGLE	1
7	505789101	COVER, OUTER LEXAN, GX4200	1
8	505766801	STIFFENER LEXAN PANEL	1
9	505632701	WASHER, SPLIT #8 S.S.	5
10	505629301	BHS, 8-32 X 3/8 S.S.	5
11	505822601	WASHER, #8 FLAT S.S.	2
12	505633101	WASHER, SPLIT #10 S.S.	7
13	505629101	BHS, 10-32 X 3/8 S.S.	7
14	505536501	E-CLIP, 1/4"	2
15	505536401	WASHER, BELLEVELLE	2
16	505536301	KNOB, BB COVER	2
17	505627101	SHSB, 3/8 x 5/8	2
18	505724501	WASHER, 3/8"X .030"THK FLAT	2
19	505761701	WASHER, LEXAN	2
20	505729901	FHS, 10-32 x 1/2 S.S.	2
21	505730001	FHS, 10-32 x 1 S.S.	4

SUB-ASSEMBLY BILL OF MATERIAL

SOFF-CUT INT'L, INC. CLAIMS PROPRIETARY RIGHTS TO THE MATERIAL DISCLOSED IN THIS DOCUMENT. THIS DOCUMENT IS PROVIDED IN CONFIDENCE AND MAY NOT BE REPRODUCED OR DISCLOSED WITHOUT WRITTEN PERMISSION FROM SOFF-CUT INT'L. © COPYRIGHT 2007, SOFF-CUT INT'L, INC. ALL RIGHTS RESERVED.

SOFF-CUT INTERNATIONAL, INC.

ASSEMBLY	GAS SAW
FUEL TANK ASSEMBLY	GX4200

510271502

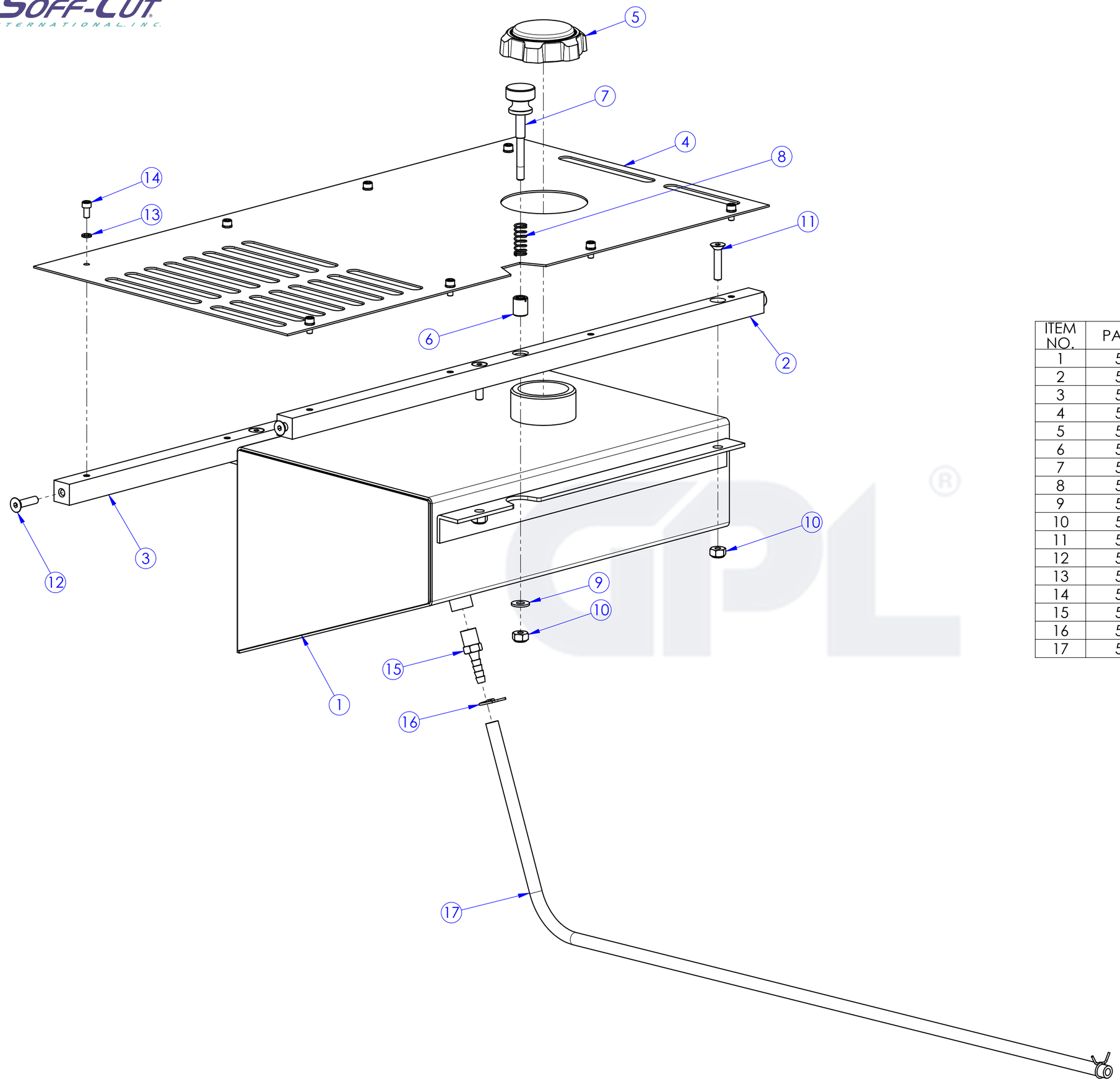

ITEM NO.	PART NUMBER	DESCRIPTION	QTY.
1	505793901	FUEL TANK	1
2	505791901	CROSS BAR, FRONT TANK	1
3	505792001	CROSS BAR, REAR TANK	1
4	505793001	COVER, FUEL TANK	1
5	505798401	FUEL TANK CAP	1
6	505748301	INSERT, 1/2-13 X 5/16-18	1
7	505767201	KNOB, HOOD LOCK	1
8	505737101	SPRING, #520	9
9	505632001	WASHER, 1/4" FLAT S.S.	1
10	505630501	NUT, NYLOC, 1/4-20 CAD	5
11	505773401	FHS, 1/4-20 x 1 1/4 S.S.	4
12	505628701	FHS, 1/4-20 x 1 S.S.	4
13	505633101	WASHER, SPLIT #10 S.S.	8
14	505627701	SHCS 10-32 X 3/8 S.S.	8
15	505796701	BARB FITTING	1
16	505776301	SPRING HOSE CLAMP, 7/16"	2
17	574859136	HOSE, FUEL 1/4" LOW PERM	1

SUB-ASSEMBLY BILL OF MATERIAL

SOFF-CUT INT'L, INC. CLAIMS PROPRIETARY RIGHTS TO THE MATERIAL DISCLOSED IN THIS DOCUMENT. THIS DOCUMENT IS PROVIDED IN CONFIDENCE AND MAY NOT BE REPRODUCED OR DISCLOSED WITHOUT WRITTEN PERMISSION FROM SOFF-CUT INT'L. © COPYRIGHT 2007, SOFF-CUT INT'L, INC. ALL RIGHTS RESERVED.

SOFF-CUT INTERNATIONAL, INC.

ASSEMBLY	GAS SAW
GUIDE ARM ASSEMBLY	GX4200

510272602

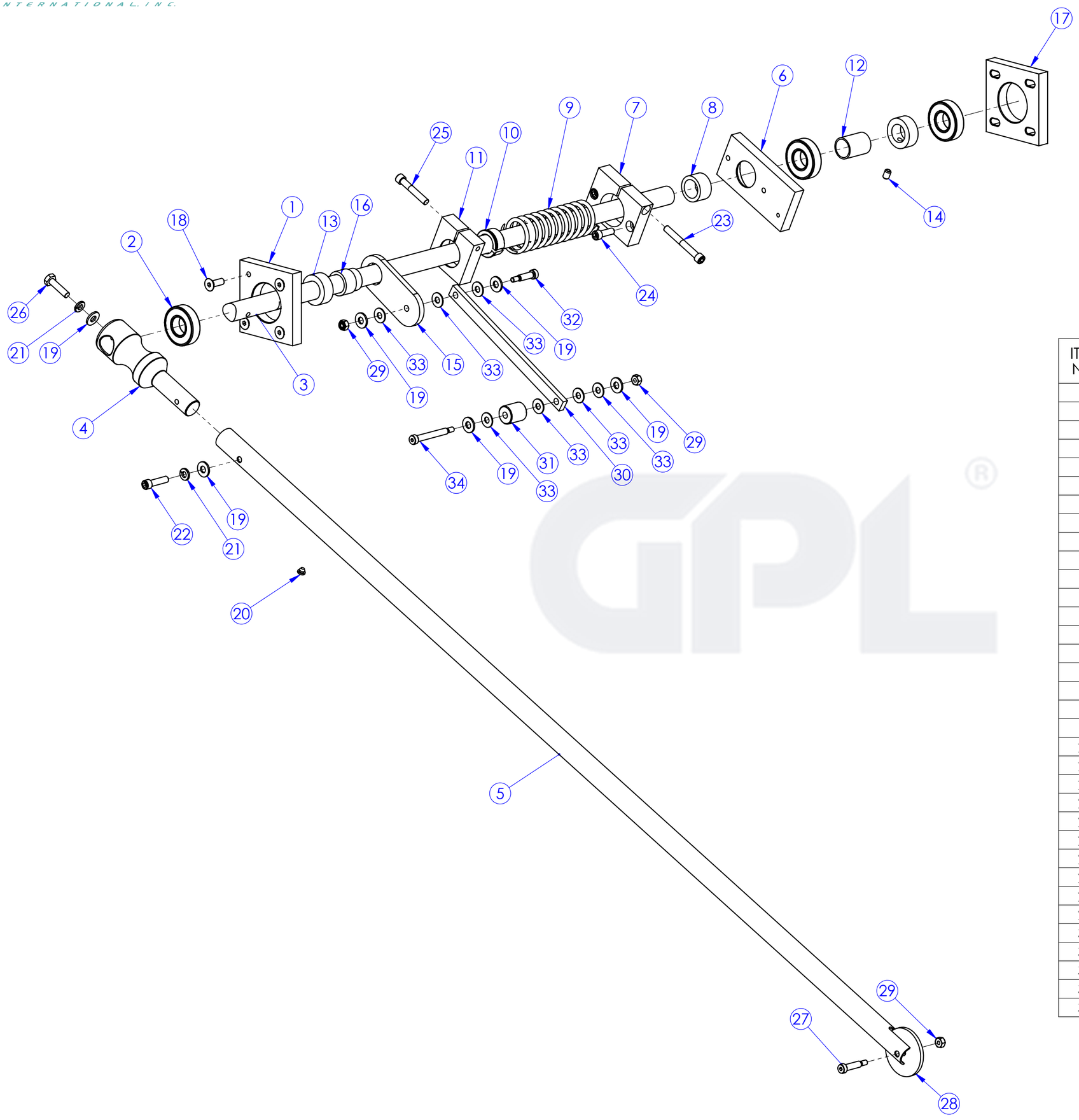

ITEM NO.	PART NUMBER	DESCRIPTION	QTY.
1	505713701	BLOCK, GUIDE SHAFT MOUNT	1
2	505736101	BEARING, .750 ID, R12-2RS	3
3	505763901	SHAFT GUIDE ARM	1
4	505769901	GUIDE MOUNTING BLOCK	1
5	505763801	GUIDE TUBE	1
6	505717101	BLOCK, GUIDE ARM SPRING	1
7	505717201	BLOCK, GUIDE ARM SPRING	1
8	505717501	BUSHING, GUIDE ARM	1
9	505774901	SPRING, GUIDE ARM	1
10	505717401	BUSHING, SPLIT, GUIDE ARM	1
11	505717301	BLOCK, GUIDE ARM RETURN	1
12	505716201	BUSHING, GUIDE ARM	1
13	505718401	SHAFT COLLAR, GUIDE ARM	2
14	505733801	SET SCREW, KNURLED .250-20 X .375	2
15	505719101	BRACKET, HOOD SUPPORT	1
16	505719301	BUSHING, HOOD SUPPORT, DELRIN	1
17	505713801	BLOCK, GUIDE SHAFT MOUNT	1
18	505628601	FHS, 1/4-20 x 3/4 S.S.	4
19	505632001	WASHER, 1/4" FLAT S.S.	6
20	505775701	BUMPER. RUBBER GUIDE	1
21	505632801	WASHER, SPLIT 1/4" S.S.	2
22	505627901	SHCS 1/4-20 X 1 S.S.	1
23	505728901	SHCS 1/4-20 X 2 S.S.	1
24	505627801	SHCS 1/4-20 X 3/4 S.S.	2
25	505728801	SHCS 1/4-20 X 1 1/2 S.S.	1
26	505727301	HHB 1/4-20 X 1 S.S.	1
27	505771701	SHSB, 1/4 X 7/8	1
28	505614201	WHEEL, GUIDE	1
29	505630401	NUT, NYLOC, #10-24 CAD	3
30	505765501	LINKAGE	1
31	505767001	SPACER, HOOD STOP	1
32	505725801	SHSB, 1/4 X 3/4	1
33	505634401	WASHER, 1/4" DELRIN	7
34	505771601	SHSB, 1/4 X 1 3/4	1

SUB-ASSEMBLY BILL OF MATERIAL

SOFF-CUT INT'L, INC. CLAIMS PROPRIETARY RIGHTS TO THE MATERIAL DISCLOSED IN THIS DOCUMENT. THIS DOCUMENT IS PROVIDED IN CONFIDENCE AND MAY NOT BE REPRODUCED OR DISCLOSED WITHOUT WRITTEN PERMISSION FROM SOFF-CUT INT'L. © COPYRIGHT 2007, SOFF-CUT INT'L, INC. ALL RIGHTS RESERVED.

SOFF-CUT INTERNATIONAL, INC.

510272502

ASSEMBLY	GAS SAW
MAINFRAME ASSEMBLY	GX4200

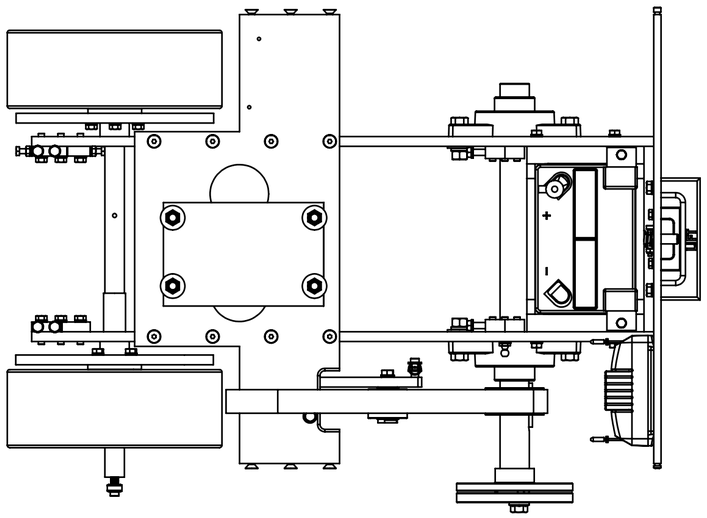

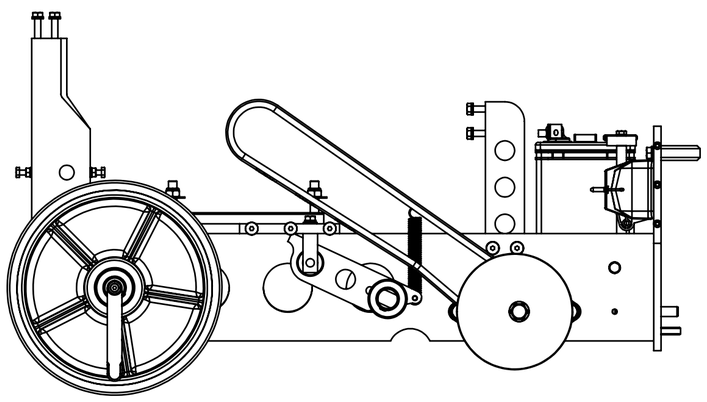

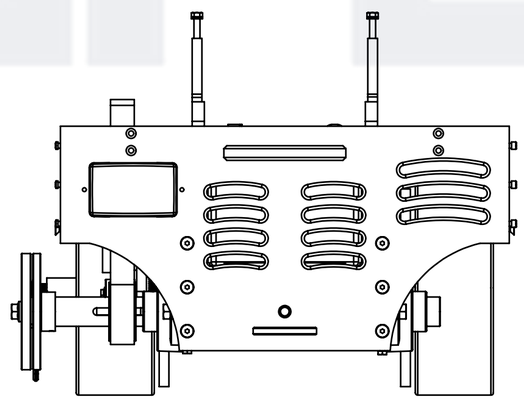

ITEM NO.	PART NUMBER	DESCRIPTION	510272502/QTY.
1	505791401	MOTOR PLATE	1
2	505755601	SIDE FRAME, RIGHT	1
3	505755501	SIDE FRAME, LEFT	1
4	505757201	GUIDE BAR ARBOR SHAFT	1
5	505755901	BRACKET, ACTUATOR SUPPORT	2
6	505755801	FRONT PLATE	1
7	505764201	BATTERY PLATE	1
8	505769301	BATTERY PLATE RUBBER	1
9	505766501	ARM, BATTERY	2
10	505718101	CLAMP, BATTERY	2
11	505765001	AXLE, REAR WHEEL	1
12	505765201	SPACER, 1"ID X .690"L DELRIN	2
13	505765101	BUSHING, FWC	1
14	505714201	GUARD, ARBOR LOCK	1
15	505716901	HANDLE	1
16	505752201	HEADLIGHT	1
17	505755301	PUMP SUPPORT ARM LEFT	1
18	505755401	PUMP SUPPORT ARM RIGHT	1
19	505786201	BATTERY, SEALED AGM	1
20	505632801	WASHER, SPLIT 1/4" S.S.	10
21	505627801	SHCS 1/4-20 X 3/4 S.S.	3
22	505627501	HHB 1/4-20 X .75 S.S.	2
23	505727301	HHB 1/4-20 X 1 S.S.	2
24	505728301	HHB 1/4-20 X 1.25 S.S. ALL THRD	3
25	505728101	HHB 1/4-20 X 2 S.S. ALL THRD	1
26	505728001	HHB 1/4-20 X 2.75 S.S. ALL THRD	2
27	505631901	NUT, 1/4-20 HEX, S.S.	4
28	505667201	GBHS, 1/4-20 X 3/4	3
29	505633001	WASHER, SPLIT 5/16" S.S.	29
30	505737201	SPRING, BLADE BLOCK #891	1
31	505727501	HHB 5/16-18 X 1	4
32	505728401	HHB 5/16-18 X 1.25 GR8	20
33	505728501	HHB 5/16-18 X 1.75 GR8	4
34	505773301	FHS, 5/16-18 x 1 1/4 S.S.	18
35	505686301	LOCKWASHER, C'SUNK 5/16 EXT TOOTH	18
36	505731001	WASHER, SPLIT 3/8" S.S.	2
37	505634501	WASHER, 3/8" DELRIN	2
38	505833101	HHB 3/8-16 X 1 S.S.	2
39	505630401	NUT, NYLOC, #10-24 CAD	1
40	505725901	SHSB, 1/4 X 1	1
41	505726701	SHSB, 5/16 X 1	1
42	505731401	WASHER, 1/2" FLAT S.S.	1
43	505632101	WASHER, 5/16" FLAT SAE CAD	2
44	505725201	WASHER, 5/16"ID X .625"OD X .032"	2
45	505764401	SPACER, GUIDE, ARBOR LOCK	1
46	505764301	SHAFT, ARBOR LOCK	1
47	505730101	FHS, 5/16-18 x 1 S.S.	12
48	505738201	BALL JOINT, 5/16-18 THREAD	1
49	505747001	BATTERY CLAMP COVER, BLACK	2
50	505636001	SPRING, REAR GUIDE ARM	1
51	505718501	ARM, REAR GUIDE	1
52	505776901	C16160 SPUR GEAR (10")	2
53	505871001	WHEEL ASSY, 11" X 4"	2
54	510271702	BLADE IDLER PULLEY	1
55	510272202	BLADE SHAFT ASSEMBLY	1
56	575244803	KIT, MOTOR MOUNT	1

SUB-ASSEMBLY BILL OF MATERIAL

SOFF-CUT INT'L, INC. CLAIMS PROPRIETARY RIGHTS TO THE MATERIAL DISCLOSED IN THIS DOCUMENT. THIS DOCUMENT IS PROVIDED IN CONFIDENCE AND MAY NOT BE REPRODUCED OR DISCLOSED WITHOUT WRITTEN PERMISSION FROM SOFF-CUT INT'L. © COPYRIGHT 2007, SOFF-CUT INT'L, INC. ALL RIGHTS RESERVED.

SOFF-CUT INTERNATIONAL, INC.

ASSEMBLY	GAS SAW
MAINFRAME ASSEMBLY	GX4200

510272502

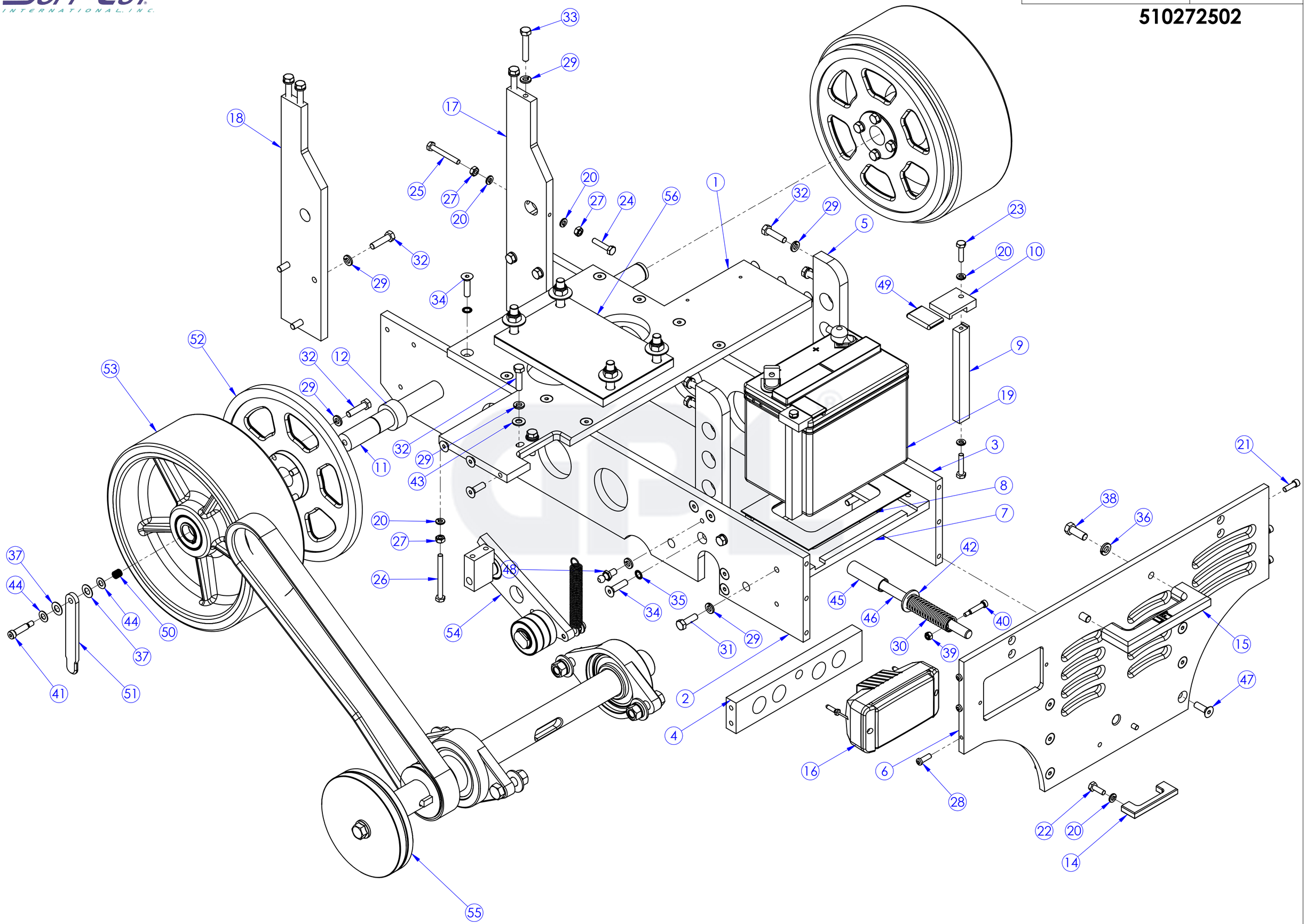

SUB-ASSEMBLY BILL OF MATERIAL

SOFF-CUT INT'L, INC. CLAIMS PROPRIETARY RIGHTS TO THE MATERIAL DISCLOSED IN THIS DOCUMENT. THIS DOCUMENT IS PROVIDED IN CONFIDENCE AND MAY NOT BE REPRODUCED OR DISCLOSED WITHOUT WRITTEN PERMISSION FROM SOFF-CUT INT'L. © COPYRIGHT 2007, SOFF-CUT INT'L, INC. ALL RIGHTS RESERVED.

SOFF-CUT INTERNATIONAL, INC.

ASSEMBLY	GAS SAW
PUMP CROSS BAR ASSEMBLY	GX4200

510272802

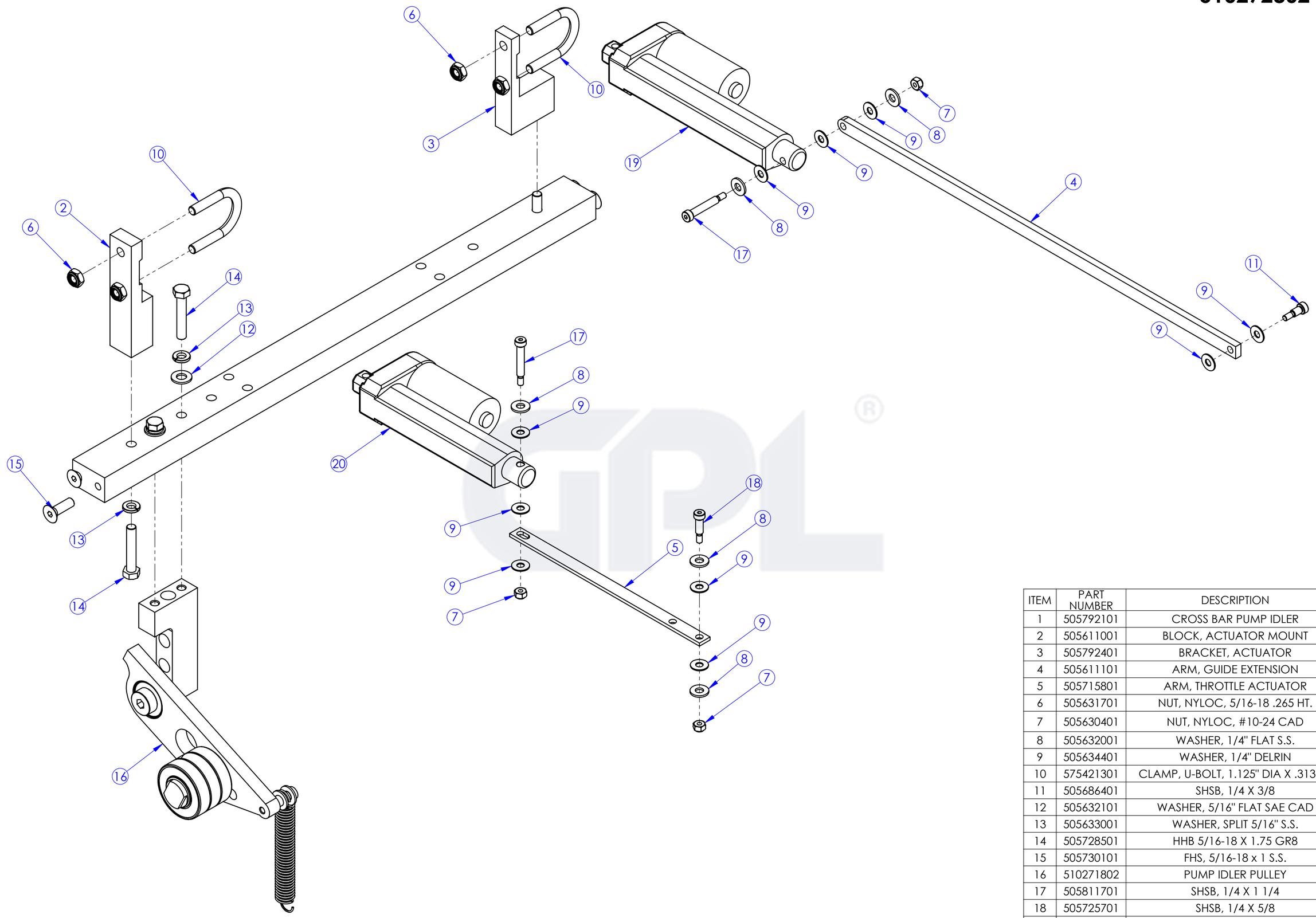

ITEM	PART NUMBER	DESCRIPTION	QTY.
1	505792101	CROSS BAR PUMP IDLER	1
2	505611001	BLOCK, ACTUATOR MOUNT	1
3	505792401	BRACKET, ACTUATOR	1
4	505611101	ARM, GUIDE EXTENSION	1
5	505715801	ARM, THROTTLE ACTUATOR	1
6	505631701	NUT, NYLOC, 5/16-18 .265 HT.	4
7	505630401	NUT, NYLOC, #10-24 CAD	3
8	505632001	WASHER, 1/4" FLAT S.S.	5
9	505634401	WASHER, 1/4" DELRIN	10
10	575421301	CLAMP, U-BOLT, 1.125" DIA X .313-18	2
11	505686401	SHSB, 1/4 X 3/8	1
12	505632101	WASHER, 5/16" FLAT SAE CAD	2
13	505633001	WASHER, SPLIT 5/16" S.S.	4
14	505728501	HHB 5/16-18 X 1.75 GR8	4
15	505730101	FHS, 5/16-18 x 1 S.S.	4
16	510271802	PUMP IDLER PULLEY	1
17	505811701	SHSB, 1/4 X 1 1/4	2
18	505725701	SHSB, 1/4 X 5/8	1
19	505848001	KIT, GUIDE ACTUATOR, GX4200	1
20	505847901	KIT, THROTTLE ACTUATOR, GX4200	1

SUB-ASSEMBLY BILL OF MATERIAL

SOFF-CUT INT'L, INC. CLAIMS PROPRIETARY RIGHTS TO THE MATERIAL DISCLOSED IN THIS DOCUMENT. THIS DOCUMENT IS PROVIDED IN CONFIDENCE AND MAY NOT BE REPRODUCED OR DISCLOSED WITHOUT WRITTEN PERMISSION FROM SOFF-CUT INT'L. © COPYRIGHT 2007, SOFF-CUT INT'L, INC. ALL RIGHTS RESERVED.

ASSEMBLY	GAS SAW
REAR ACCESS ASSEMBLY	GX4200

575438602

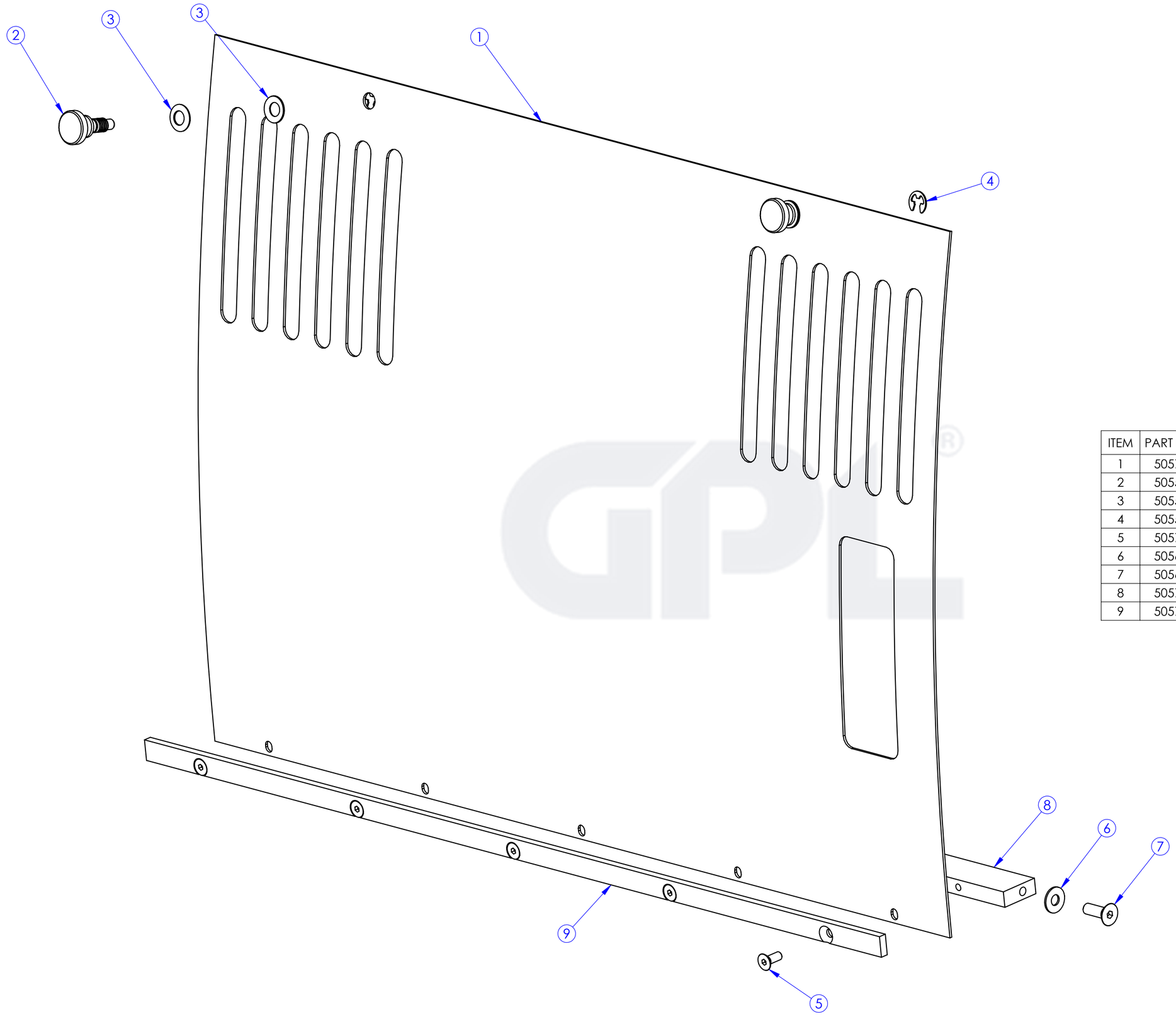

ITEM	PART NUMBER	DESCRIPTION	QTY.
1	505791601	PANEL, REAR ACCESS	1
2	505536301	KNOB, BB COVER	2
3	505536401	WASHER, BELLEVILLE, 5/16" S.S.	4
4	505536501	E-CLIP, 1/4"	2
5	505729901	FHS, 10-32 x 1/2 S.S.	5
6	505634401	WASHER, 1/4" DELRIN	2
7	505628601	FHS, 1/4-20 x 3/4 S.S.	2
8	505766101	CROSS BAR PIVOT REAR	1
9	505767101	BRACE, REAR PANEL	1

SUB-ASSEMBLY BILL OF MATERIAL

SOFF-CUT INT'L, INC. CLAIMS PROPRIETARY RIGHTS TO THE MATERIAL DISCLOSED IN THIS DOCUMENT. THIS DOCUMENT IS PROVIDED IN CONFIDENCE AND MAY NOT BE REPRODUCED OR DISCLOSED WITHOUT WRITTEN PERMISSION FROM SOFF-CUT INT'L. © COPYRIGHT 2007, SOFF-CUT INT'L, INC. ALL RIGHTS RESERVED.

SOFF-CUT INTERNATIONAL, INC.

ASSEMBLY	GAS SAW
PANEL ASSEMBLY	GX4200

574891302

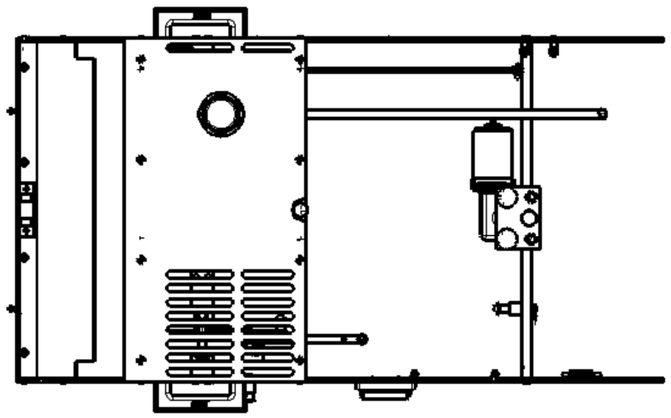

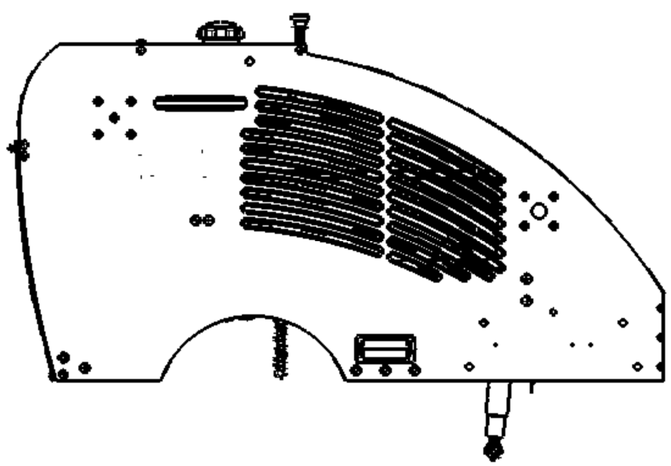

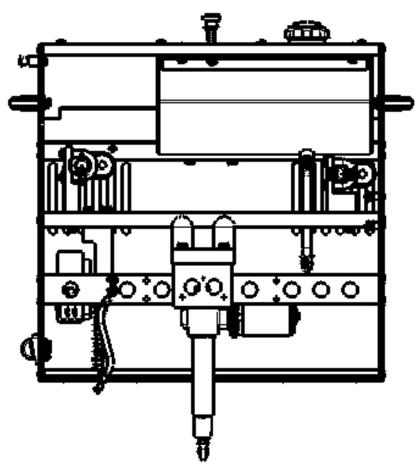

ITEM NO.	PART NUMBER	DESCRIPTION	QTY.
1	505792601	SIDE PANEL, RIGHT, GX4200	1
2	505758801	CROSSBAR, REAR ACCESS	1
3	505792501	SIDE PANEL, LEFT	1
4	505757801	COVER, HANDLE ACTUATOR	1
5	505757001	ACTUATOR BRACKET, HANDLE	1
6	505718601	SHAFT, GUIDE ARM STOP	1
7	505632701	WASHER, SPLIT #8 S.S.	6
8	505628201	SHCS 8-32 X 1/2 S.S.	2
9	505633101	WASHER, SPLIT #10 S.S.	4
10	505729601	SHCS 10-32 X 1/2 S.S.	4
11	505632801	WASHER, SPLIT 1/4" S.S.	3
12	505627501	HHB 1/4-20 X .75 S.S.	1
13	505628601	FHS, 1/4-20 x 3/4 S.S.	4
14	505773401	FHS, 1/4-20 x 1 1/4 S.S.	4
15	505630501	NUT, NYLOC, 1/4-20 CAD	4
16	505633001	WASHER, SPLIT 5/16" S.S.	6
17	505728501	HHB 5/16-18 X 1.75 GR8	4
18	505731001	WASHER, SPLIT 3/8" S.S.	4
19	510301001	WASHER, 3/8" FLAT SAE	4
20	505833101	HHB 3/8-16 X 1 S.S.	4
21	505748301	INSERT, 1/2-13 X 5/16-18	2
22	505716901	HANDLE	2
23	505787401	SIDE LIGHT	1
24	505756001	CROSSBAR, ACTUATOR	1
25	505756201	BLOCK, SPRING, FRONT WHEEL	1
26	505756301	FRONT WHEEL SPRING BLOCK STOPPER	1
27	505683501	BLD IDLER PULLEY SPRG BLK SPRT	1
28	505632101	WASHER, 5/16" FLAT SAE CAD	1
29	505726401	SHSB, 5/16 X 3/4	1
30	505756101	UPPER FRONT WHEEL SPRING BLOCK	1
31	505630601	NUT, NYLOC, 5/16-18 CAD	1
32	505627201	SHSB, 3/8 X 2 1/4	1
33	505757101	BRACKET, ACTUATOR, LOWER SHOCK	1
34	505627901	SHCS 1/4-20 X 1 S.S.	2
35	505775601	CAP, RUBBER	2
36	505690701	SPRING, BLADE BLOCK	2
37	523059611	SHSB, 1/2 x 2 1/4	2
38	505775501	FLNG SLEEVE BEARING, .500"ID X 1.00"	2
39	505730101	FHS, 5/16-18 x 1 S.S.	4
40	505728401	HHB 5/16-18 X 1.25 GR8	2
41	505628001	SHCS 1/4-20 X 1 1/4 S.S.	2
42	505628101	SHCS 8-32 X 3/8 S.S.	4
43	505822601	WASHER, #8 FLAT S.S.	4
44	505748701	3/8" CABLE CLAMP	4
45	505797702	HARNESS, WIRING, SIDELAMP	1
46	575446606	KIT, GROUND WIRE, W/ 1/4" RINGS	1
47	505848401	KIT, BLADE ACTUATOR	1
48	575438602	REAR ACCESS ASSEMBLY	1
49	510272802	PUMP CROSS BAR ASSEMBLY	1
50	510271502	FUEL TANK ASSEMBLY	1

SUB-ASSEMBLY BILL OF MATERIAL

SOFF-CUT INT'L, INC. CLAIMS PROPRIETARY RIGHTS TO THE MATERIAL DISCLOSED IN THIS DOCUMENT. THIS DOCUMENT IS PROVIDED IN CONFIDENCE AND MAY NOT BE REPRODUCED OR DISCLOSED WITHOUT WRITTEN PERMISSION FROM SOFF-CUT INT'L. © COPYRIGHT 2007, SOFF-CUT INT'L, INC. ALL RIGHTS RESERVED.

SOFF-CUT INTERNATIONAL, INC.

ASSEMBLY	GAS SAW
PANEL ASSEMBLY	GX4200

574891302

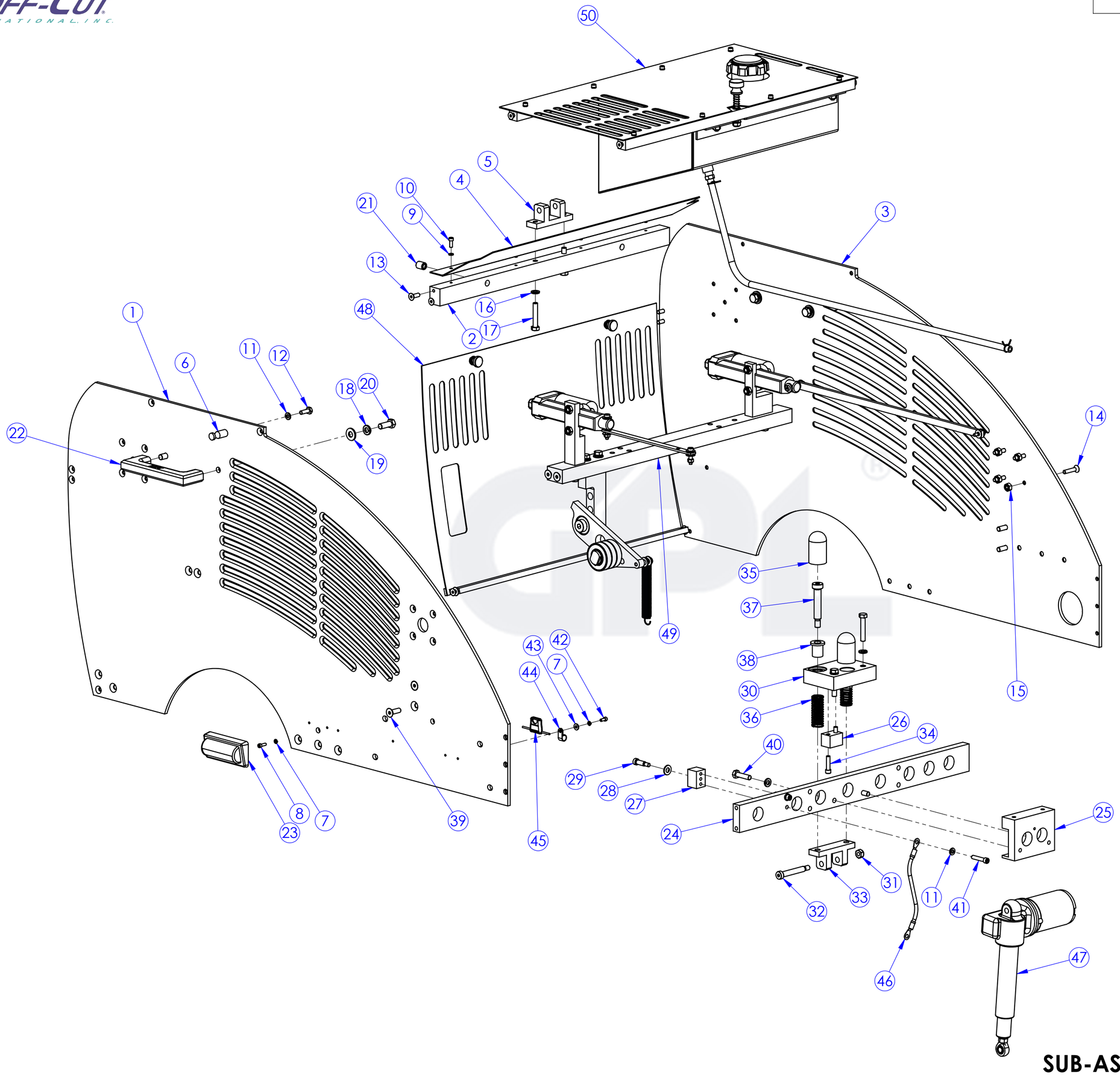

SUB-ASSEMBLY BILL OF MATERIAL

SOFF-CUT INT'L, INC. CLAIMS PROPRIETARY RIGHTS TO THE MATERIAL DISCLOSED IN THIS DOCUMENT. THIS DOCUMENT IS PROVIDED IN CONFIDENCE AND MAY NOT BE REPRODUCED OR DISCLOSED WITHOUT WRITTEN PERMISSION FROM SOFF-CUT INT'L. © COPYRIGHT 2007, SOFF-CUT INT'L, INC. ALL RIGHTS RESERVED.

SOFF-CUT INTERNATIONAL, INC.

ASSEMBLY	GAS SAW
HOOD ASSEMBLY	GX4200

510272402

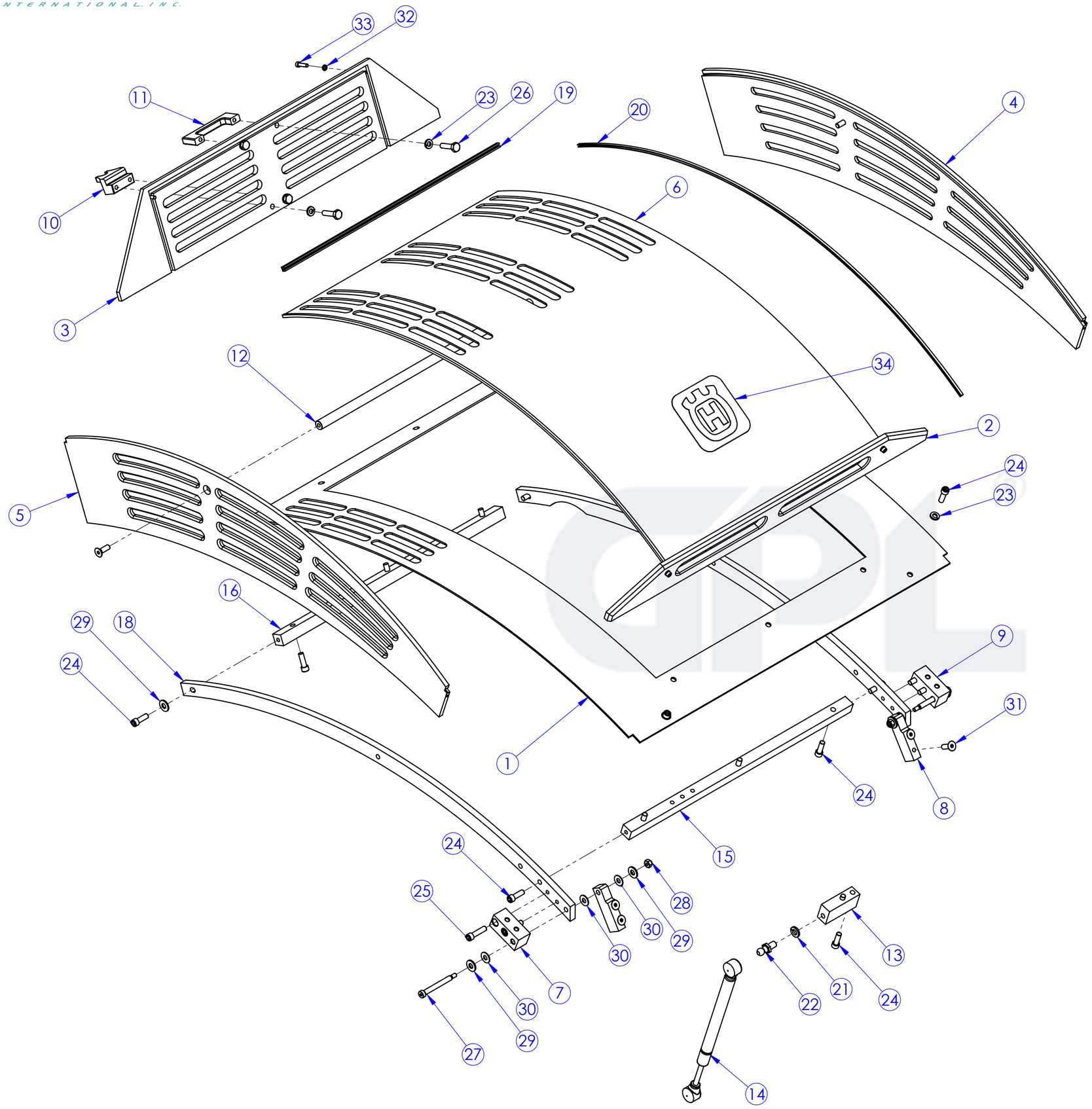

ITEM NO.	PART NUMBER	DESCRIPTION	QTY.
1	505763701	PANEL, HOOD SKIRT	1
2	505763501	PLATE, FRONT HOOD	1
3	505763601	PLATE, REAR HOOD	1
4	505712201	PLATE, SIDE HOOD, LEFT	1
5	505712301	PLATE, SIDE HOOD, RIGHT	1
6	505713401	PANEL, HOOD	1
7	505713101	BLOCK, HOOD MOUNT, RIGHT	1
8	505767501	BRACKET, HOOD	2
9	505713001	BLOCK, HOOD MOUNT, LEFT	1
10	505719501	BLOCK, HOOD LATCH	1
11	505714201	GUARD, ARBOR LOCK	1
12	505713201	ROD, HOOD SUPPORT	1
13	505712901	BLOCK, SUPPORT, GAS SHOCK	1
14	505738101	GAS SHOCK, HOOD	1
15	505712701	BAR, FRONT SUPPORT	1
16	505712801	BAR, FRONT SUPPORT	1
17	505791201	SUPPORT, HOOD, LEFT	1
18	505712601	SUPPORT, HOOD, SIDE	1
19	505739201	GLAZING CHANNEL, 15/64"	2
20	505739301	GLAZING CHANNEL, 9/64"	2
21	505633001	WASHER, SPLIT 5/16" S.S.	1
22	505738201	BALL JOINT, 5/16-18 THREAD	1
23	505632801	WASHER, SPLIT 1/4" S.S.	6
24	505627801	SHCS 1/4-20 X 3/4 S.S.	14
25	505627901	SHCS 1/4-20 X 1 S.S.	4
26	505727301	HHB 1/4-20 X 1 S.S.	4
27	505771201	SHSB, 1/4 X 2	2
28	505630401	NUT, NYLOC, #10-24 CAD	2
29	505632001	WASHER, 1/4" FLAT S.S.	6
30	505634401	WASHER, 1/4" DELRIN	6
31	505628601	FHS, 1/4-20 x 3/4 S.S.	6
32	505632701	WASHER, SPLIT #8 S.S.	4
33	505729101	SHCS 8-32 X 5/8 S.S.	4
34	542190735	DECAL, HUSQVARNA CROWN, 3"	1

SUB-ASSEMBLY BILL OF MATERIAL

SOFF-CUT INT'L, INC. CLAIMS PROPRIETARY RIGHTS TO THE MATERIAL DISCLOSED IN THIS DOCUMENT. THIS DOCUMENT IS PROVIDED IN CONFIDENCE AND MAY NOT BE REPRODUCED OR DISCLOSED WITHOUT WRITTEN PERMISSION FROM SOFF-CUT INT'L. © COPYRIGHT 2007, SOFF-CUT INT'L, INC. ALL RIGHTS RESERVED.

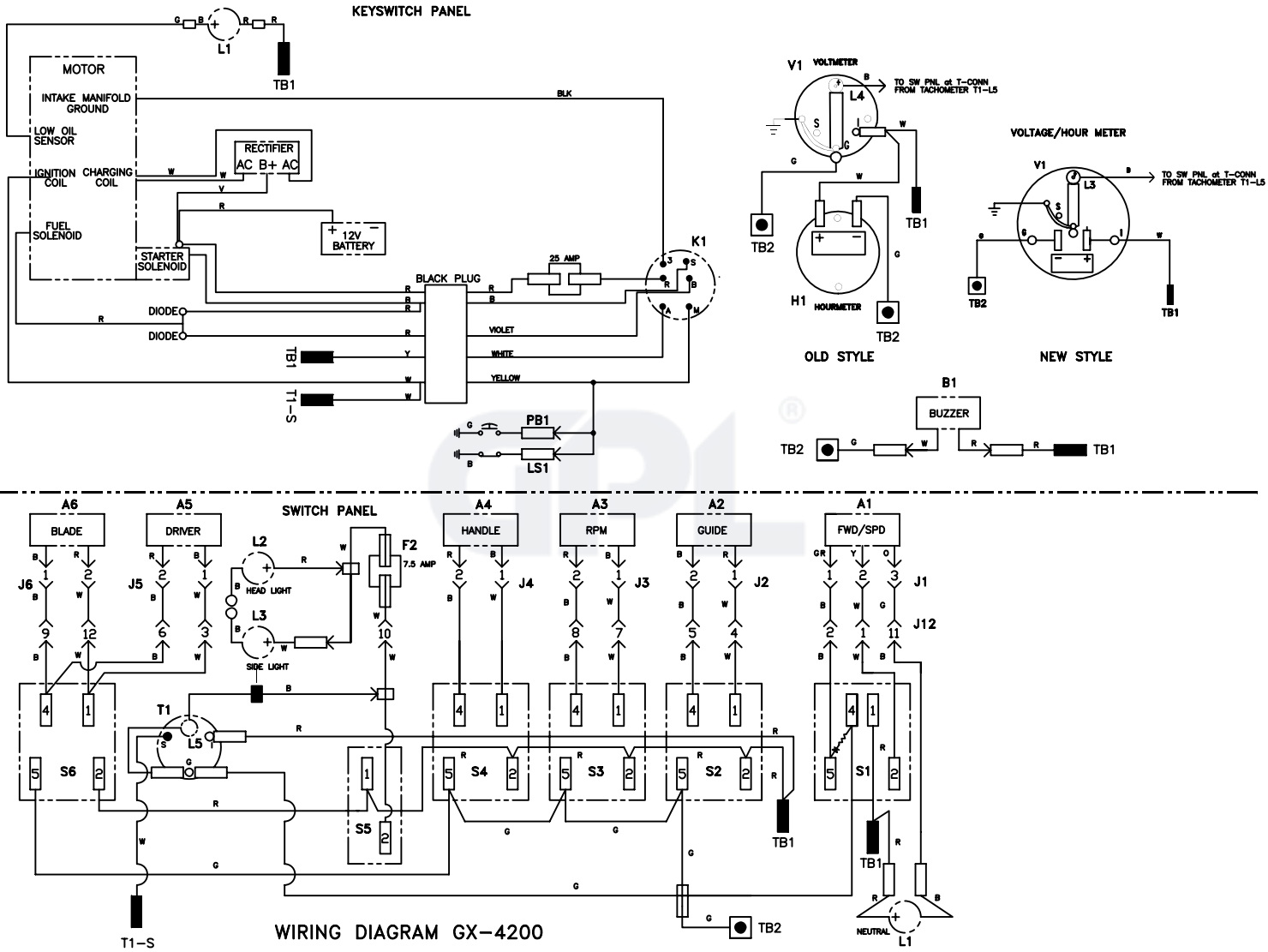
KEYSWITCH PANEL
L1
TB1
MOTOR
INTAKE MANIFOLD GROUND
LOW OIL SENSOR
IGNITION COIL
CHARGING COIL
FUEL SOLENOID
STARTER SOLENOID
RECTIFIER
AC B+ AC
12V BATTERY
BLK
BLACK PLUG
25 AMP
K1
DIODE
DIODE
VIOLET
WHITE
YELLOW
TB1
T1-S
PB1
LS1
V1 VOLTMETER
L4
TO SW PNL at T-CONN FROM TACHOMETER T1-L5
TB2
H1 HOURMETER
OLD STYLE
VOLTAGE/HOUR METER
L3
NEW STYLE
B1
BUZZER
SWITCH PANEL
A6 BLADE
A5 DRIVER
A4 HANDLE
A3 RPM
A2 GUIDE
A1 FWD/SPD
J6
J5
J4
J3
J2
J1
J12
L2 HEAD LIGHT
L3 SIDE LIGHT
F2 7.5 AMP
T1
L5
S6
S5
S4
S3
S2
S1
NEUTRAL
WIRING DIAGRAM GX-4200