Husqvarna®

SPARE PARTS LIST

EARLY ENTRY SAWS

SOFF CUT 2500, 2015-06

L SOFF CUT X2500
BLADE BLOCK ASSEMBLY

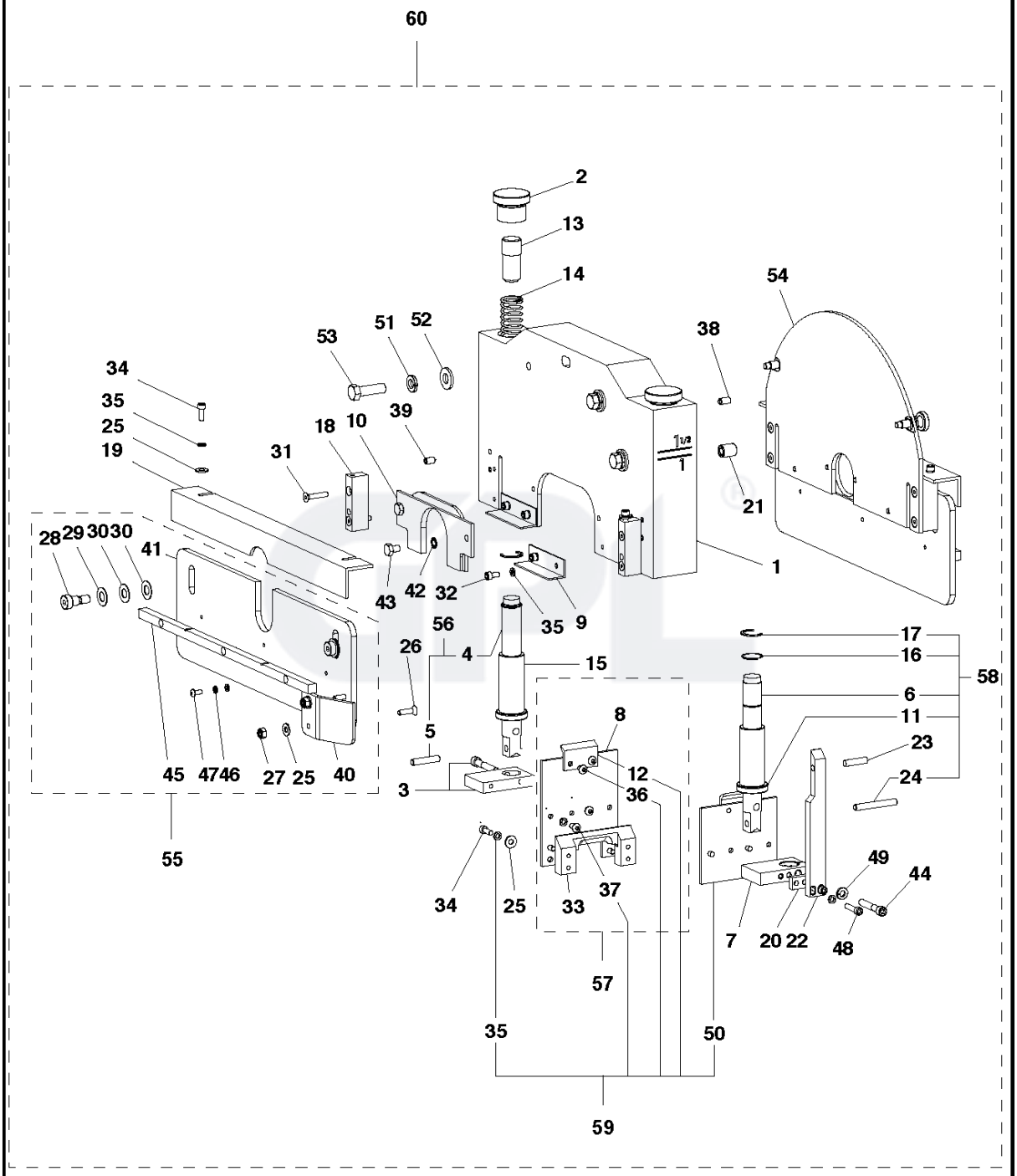

Ref	Part No	Description	Remark	QTY KIT
1	505 70 90-01	BLOCK. BLADE		1
2	505 70 92-01	KNOB		2
3	505 87 43-01	G1/G2/G8 FRONT ROD CLAMP		1
4	505 70 94-01	ROD. BLADE BLOCK (FRONT)		1
5	505 77 40-01	PRECISION DOW PIN 1/4 X 1 1/4		1
6	505 70 93-01	ROD. BLADE BLOCK (REAR)		1
7	505 87 93-01	G2000 REAR ROD CLAMP		1
8	505 70 98-01	DIVERTER. PLT FRNT/CHGE NXT PO		1
9	505 71 17-01	ANGLE DIVERTER (INNER)SMALL		2
10	505 71 82-01	INSERT		1
11	505 73 80-01	SEAL DUST		2
12	505 71 40-01	BATTERY SUPPORT PLATE		2
13	505 70 95-01	ROD. SPRING GUIDE B.B.		2
14	505 73 72-01	SPRING		2
15	505 66 76-01	G2000 3/4 X 1 X 2 3/8 BUSHING		2
16	505 74 84-01	SPIRAL RETAINING RING		2
17	505 73 36-01	SNAP RING		2
18	505 71 02-01	BLOCK DIVERTER MTG (INNER)		2
19	505 71 06-01	ANGLE BRACKET		1
20	505 76 07-01	DEPTH POINTER SPACER		1
21	505 74 83-01	THREADED INSERT S.S.		2
22	505 60 14-01	DEPTH GAUGE ARM		1
23	505 78 79-01	1/4 X 1 MAGNET		1
24	505 77 54-01	SNAPPER PIN 1/4 X 2 1/2		1
25	505 63 53-01	FLAT WASH #10 S.S		8
26	505 77 29-01	FHC 10-24 X 3/4 SS		2
27	505 63 04-01	NYLOC NUT #10-24 CAD.PL.		2
28	505 72 61-01	SHSB 3/8 X 3/8 BLK STL		2
29	505 63 42-01	FLAT WSHR.750 X .375 X .031 SS		2
30	505 63 45-01	FLAT WSHR .750X.379 X.031 DEL		4
31	505 73 00-01	FHS 10-32-1 S.S.		4
32	505 62 77-01	SHC 10-32-3/8 S.S. NF		4
33	505 71 03-01	DIVERTER BLOCK (FRONT) G2&G1 N		1
34	505 72 96-01	SHC 10-32 X 1/2 S.S. CBL MTS		6
35	505 63 31-01	LK WASH #10 SPLIT SS		16
36	505 62 95-01	BHS 10-32-1/4 S.S.		4
37	505 62 91-01	BHS 10-32-3/8 S.S.		4
38	505 63 00-01	FULL DOG SET SCREW S.S.1/4-20		2
39	505 73 41-01	ST.SCRW BLK CONE PT 1/4-20X1/2		4
40	505 76 15-01	LEXAN SHIELD DIVERTER-THICKER		1
41	505 71 00-01	DIVERTER. INNER (LEXAN)		1
42	505 73 18-01	LK WASH 1/4 EXT TOOTH		2
43	505 62 73-01	HEX BOLT 1/4-20-3/8 S.S.		2
44	505 72 88-01	SHC 1/4-20-1 1/2 S.S.		2
45	505 71 88-01	STIFFENER. LEXAN PNL		1
46	505 63 27-01	LK WASH #8 SPLIT S.S.		6
47	505 62 93-01	BHS 8-32-3/8 S.S.		3
48	505 77 28-01	SHC 10-32 X 7/8 SS		2
49	505 63 28-01	LK WASH 1/4 SPLIT SS		1
50	505 67 31-01	DIVERTER. PLATE (REAR)		1
51	505 73 10-01	LK WASH 3/8 SPLIT SS		3
52	510 30 10-01	WASHER		3
53	505 72 76-01	HEX BOLT 3/8-16X1 1/4 CAD GR 5		3
54	505 85 76-01	BLADE BLOCK COVER FOR G2000		1
55	505 88 27-01	X2500 INNER LEXAN		1
56	505 87 91-01	G2000 FRNT BLD BLK SHAFT		1
57	505 87 95-01	G2000 FRNT DIVERTER PLT ASSMBL		1
58	505 87 90-01	G2000 REAR BLD BLK SHAFT		1
59	505 87 94-01	G2000 REAR DIVRTOR PLT ASSMBLY		1
60	510 27 21-05	ASSEMBLY		1

M SOFF CUT X2500
BLADE BLOCK COVER

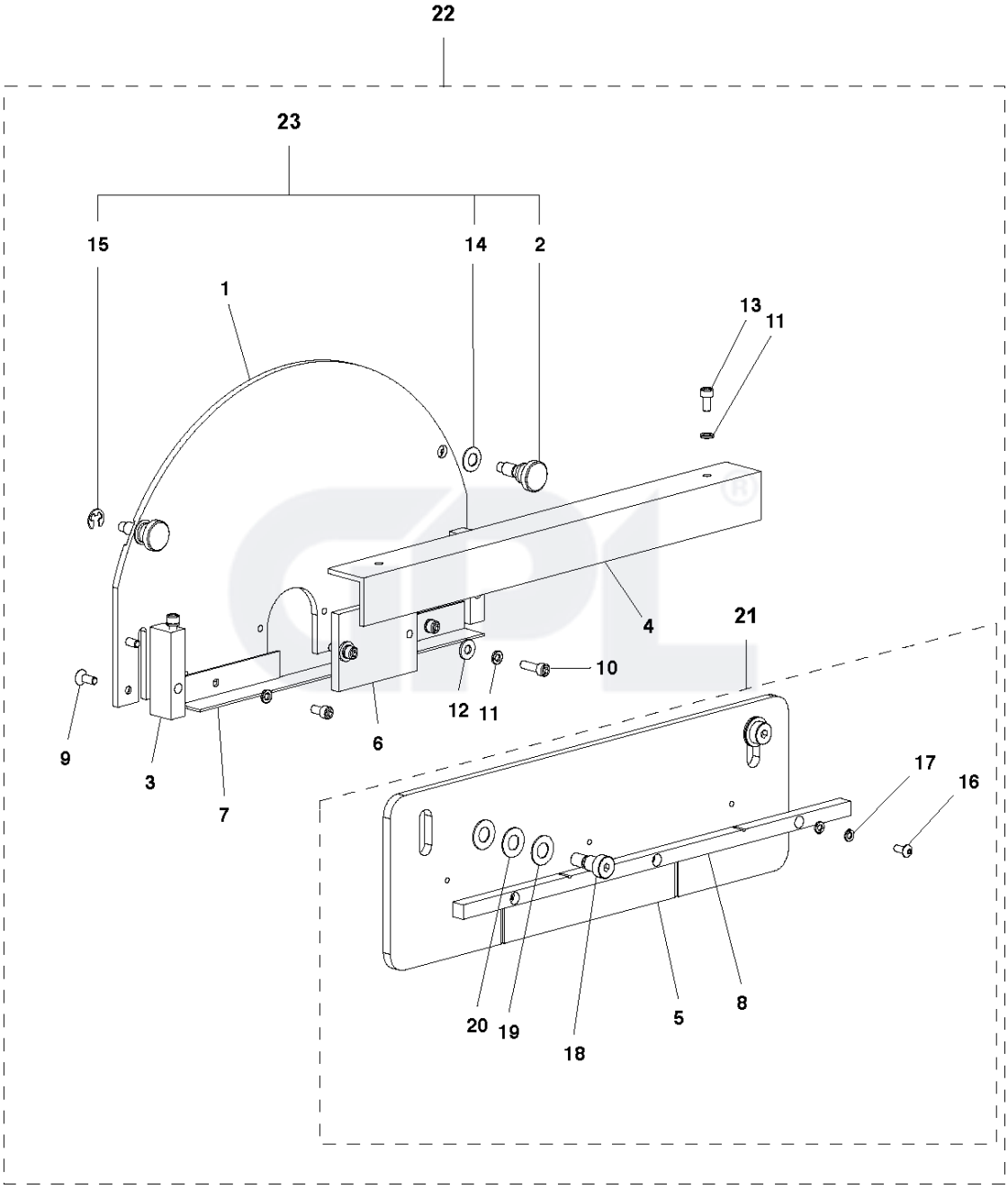

Ref	Part No	Description	Remark	QTY	KIT
1	505 70 91-01	COVER		1	22
2	505 53 63-01	KNOB		2	22
3	505 71 01-01	BLOCK DIVERTER MTG (OUTER)		2	22
4	505 71 05-01	ANGLE BRACKET		1	22
5	505 70 99-01	DIVERTER. OUTER (LEXAN)		1	21,22
6	505 72 11-01	EXTENSION PLATE/BLADE COVER		1	21,22
7	505 71 16-01	AGL DVTR BLD CVR NOTCHED		1	22
8	505 71 88-01	STIFFENER. LEXAN PNL		1	21,22
9	505 72 99-01	FHS 10-32-1/2 S.S.		4	22
10	505 72 97-01	SHC 10-32 X 5/8 S.S.		2	22
11	505 63 31-01	LK WASH #10 SPLIT SS		6	22
12	505 63 53-01	FLAT WASH #10 S.S		2	22
13	505 62 77-01	SHC 10-32-3/8 S.S. NF		4	22
14	505 53 64-01	WASHER		2	22
15	505 53 65-01	E-CLIP		2	22
16	505 62 93-01	BHS 8-32-3/8 S.S.		3	21,22
17	505 63 27-01	LK WASH #8 SPLIT S.S.		6	21,22
18	505 72 61-01	SHSB 3/8 X 3/8 BLK STL		2	21,22
19	505 63 42-01	FLAT WSHR.750 X .375 X .031 SS		2	21,22
20	505 63 45-01	FLAT WSHR .750X.379 X.031 DEL		4	21,22
21	505 87 96-01	G2000 OUTER LEXAN		1	22
22	505 85 76-01	BLADE BLOCK COVER FOR G2000		1	
23	505 48 29-01	KNOB		1	22

D SOFF CUT X2500
BLADE IDLER PULLEY

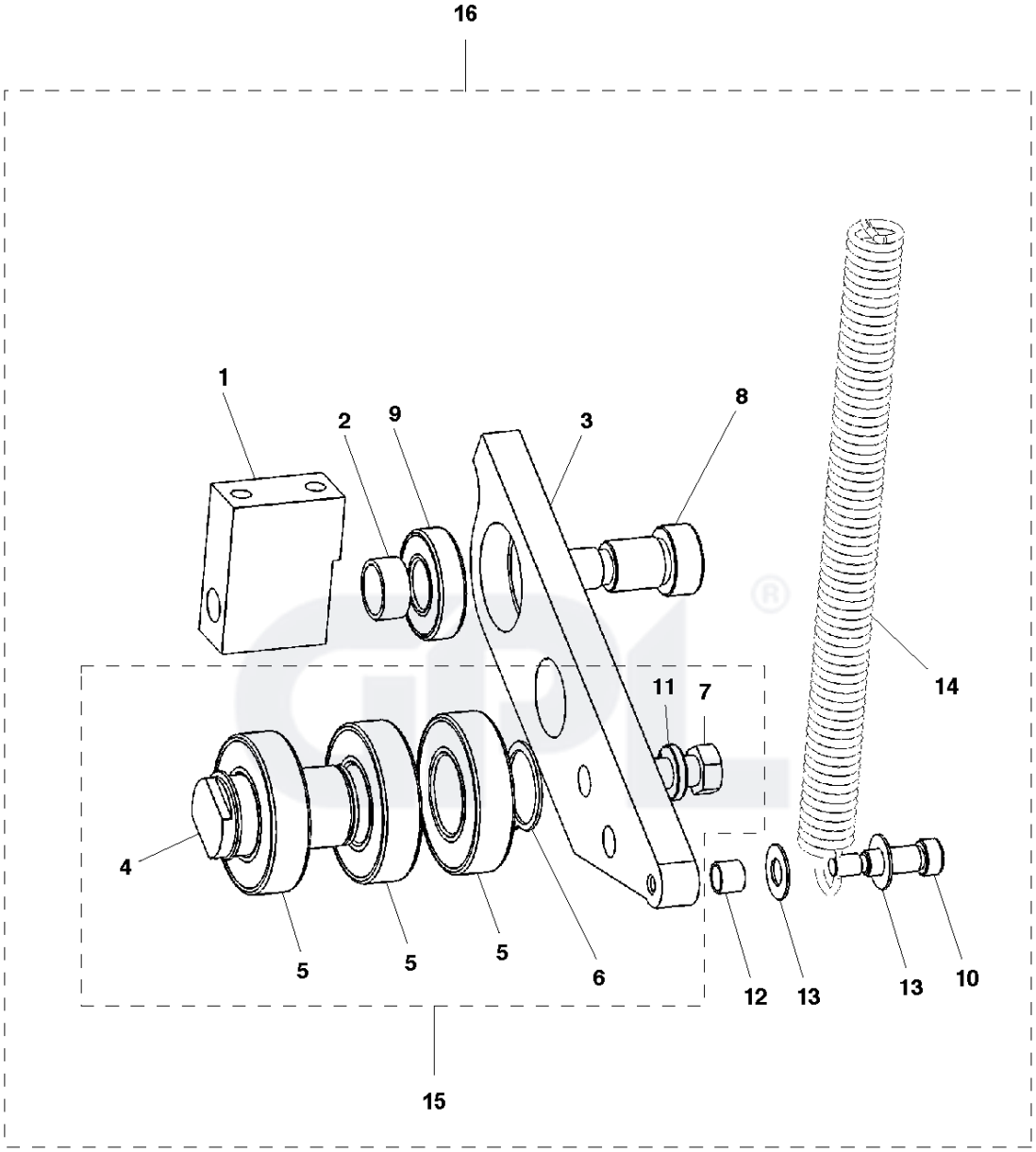

Ref	Part No	Description	Remark	QTY KIT
1	505 71 48-01	MTG BLOCK - BLADE IDLER PULLEY		1
2	505 71 46-02	SPACER		1
3	505 70 69-01	PUMP ARM IDLER PULLEY		1
4	505 70 68-01	SHAFT. BLADE BELT TENSIONER (P		1
5	505 73 63-01	10"WHEEL/ BLK SEAL SINLE LIP		3
6	542 20 62-05	SNAP RING		2
7	539 97 69-41	SCREW		1
8	505 72 62-01	SHSB 5/8 X 3/4 BLK STL		1
9	505 73 60-01	IDLER PULLEYS BLK SEAL SGL LIP		1
10	505 72 64-01	SHSB 5/16 X 3/4 BLK STL		1
11	505 73 10-01	LK WASH 3/8 SPLIT SS		1
12	505 71 79-01	BUSHING.G.A.(.315 SPACER)		1
13	505 72 52-01	WASHER		2
14	505 73 73-01	SPRING		1
15	505 48 34-01	PULLEY		1
16	510 27 17-05	ASSEMBLY		1

GPL®

F **SOFF CUT X2500**
BLADE SHAFT ASSEMBLY

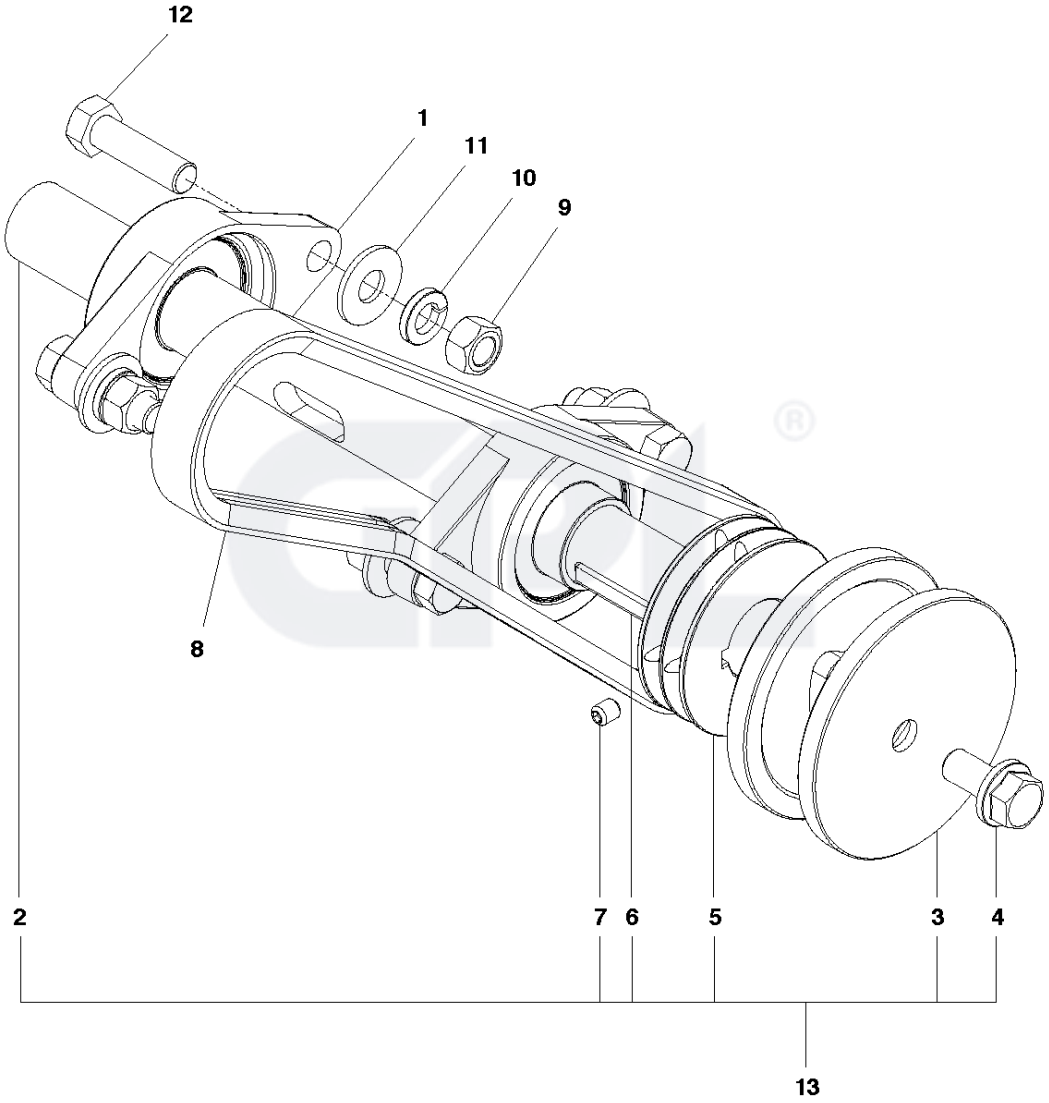

Ref	Part No	Description	Remark	QTY KIT
1	505 73 65-01	BLADE SHAFT		2
2	505 57 32-03	SHAFT		1
3	505 49 15-04	WASHER		1
4	505 48 37-01	BOLT		1
5	587 92 97-01	PULLEY		1
6	510 31 81-01	KEY		1
7	510 34 34-01	SET SCREW KNURLED 5/16-18X 3/8		4
8	505 74 04-01	BELT		1
9	541 20 48-36	NUT		4
10	505 73 11-01	LK WASH 1/2 SPLIT SS		4
11	505 73 14-01	FLAT WASH 1/2 X 1 1/4 O.D. S.S		4
12	505 72 70-01	HEX BOLT 1/2-20-1 3/4 GR 8		4
13	505 88 07-01	BLADE SHAFT		1

GPL®

K SOFF CUT X2500
CONTROL PANEL ASSEMBLY

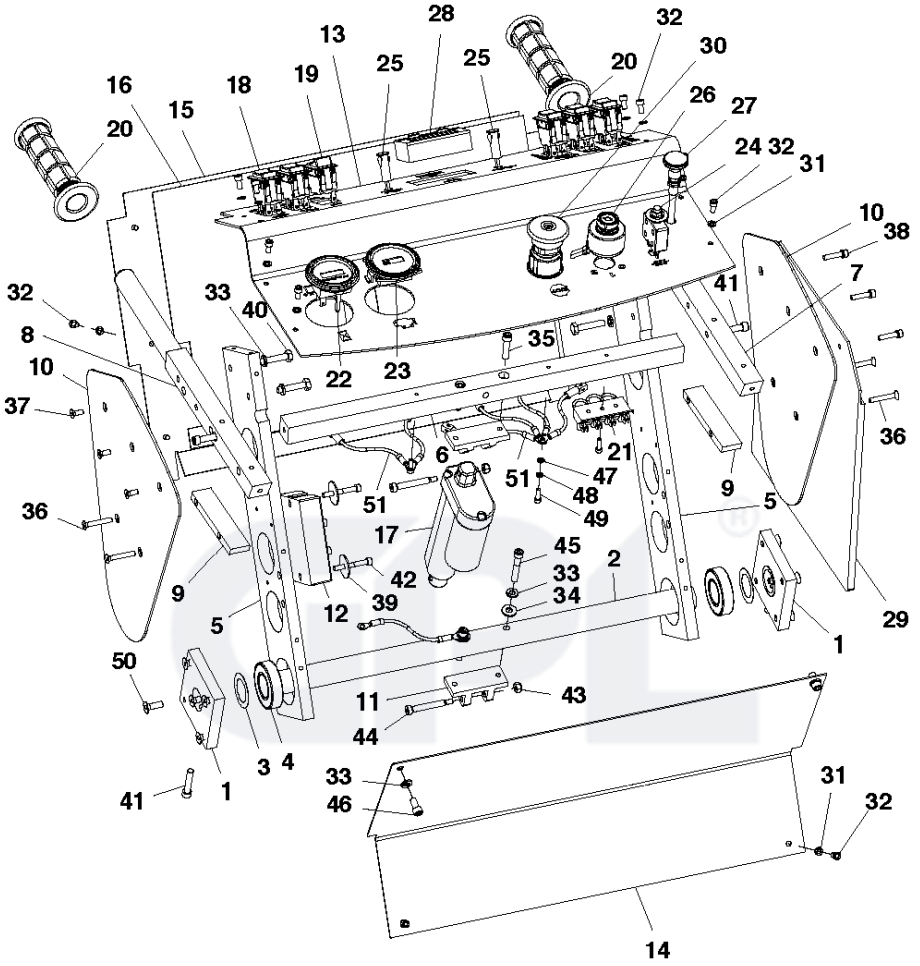

Ref	Part No	Description	Remark	QTY KIT
1	505 71 21-01	PLATE SUPPORT. HANDLE SHAFT		2
2	505 71 20-01	SHAFT HANDLE (1" DIA. AL)		1
3	505 73 69-01	SHIM S.S. HANDLE		2
4	505 73 63-01	10"WHEEL/ BLK SEAL SINLE LIP		2
5	505 71 18-01	PLATE SUPPORT HANDLE		2
6	505 70 84-01	CROSS BAR (KEY DASH/ACT. PANEL		1
7	505 70 88-01	HANDLE BAR		1
8	505 70 89-01	HANDLE BAR		1
9	505 60 71-01	SPACER BAR HANDLE		2
10	505 71 19-01	SIDE COVER HANDLE (INTERCHANGE		2
11	505 70 66-01	ACT. BRKT AGLE /HDLE/MN FRAME		2
12	505 69 19-01	VOLTAGE REGULATOR/RECTIFIER		1
13	505 60 89-01	CONTROL PANEL SYSTEM		1
14	505 60 64-01	PAN		1
15	505 70 71-01	PANEL. COVER (HANDLE ACT.)		1
16	505 72 02-01	RUBBER FOR 1523		1
17	505 84 49-01	ACTUATOR		1
18	505 75 07-01	ACTUATOR		5
19	505 75 08-01	SWITCH LIGHTS		1
20	505 60 11-01	HANDLE GRIP		2
21	505 75 27-01	TERMINAL BLOCK FOR G2000		1
22	505 70 43-01	VOLT/HOUR METER		1
23	516 02 77-01	KIT		1
24	505 60 51-01	25 AMP. CIRCUIT BREAKER		1
25	505 84 60-01	G2/G1/GX3000 LED LIGHT		2
26	576389003	TBD		1
27	505 69 50-01	CHOKE CABLE		1
28	505 60 50-01	COMBO METER/TOTALIZER		1
29	505 72 15-01	JOINT		1
30	505 70 44-01	E-STOP		1
31	505 63 31-01	LK WASH #10 SPLIT SS		19
32	505 62 77-01	SHC 10-32-3/8 S.S. NF		16
33	505 63 28-01	LK WASH 1/4 SPLIT SS		8
34	505 63 20-01	WASHER		2
35	505 62 79-01	SHC 1/4-20-1 S.S.		2
36	505 72 98-01	FHS 10-24-1 1/4 S.S.		4
37	505 72 99-01	FHS 10-32-1/2 S.S.		3
38	505 77 28-01	SHC 10-32 X 7/8 SS		3
39	505 72 48-01	FLAT WASH #10 X 1"O.D.FENDER		2
40	505 72 74-01	HEX BOLT 1/4-20 X 1 1/4 GR. 8		4
41	505 62 80-01	SHC 1/4-20-1 1/4 S.S.		4
42	505 72 92-01	SHC 10-24 X 1 1/2 STAINLESS S		2
43	505 63 04-01	NYLOC NUT #10-24 CAD.PL.		2
44	505 72 60-01	SHSB 1/4 X 1 1/2 BLK STL		2
45	505 72 88-01	SHC 1/4-20-1 1/2 S.S.		2
46	505 72 23-01	SHC 1/4-20-1/2 S.S		2
47	505 73 17-01	LK WASH #8 EXT TOOTH		2
48	505 63 27-01	LK WASH #8 SPLIT S.S.		2
49	505 62 82-01	SHC 8-32 X 1/2 S.S.		3
50	505 62 86-01	FHS 1/4-20-3/4 S.S.		10
51	575 44 66-02	KIT		6

A SOFF CUT X2500
ENGINE ASSEMBLY

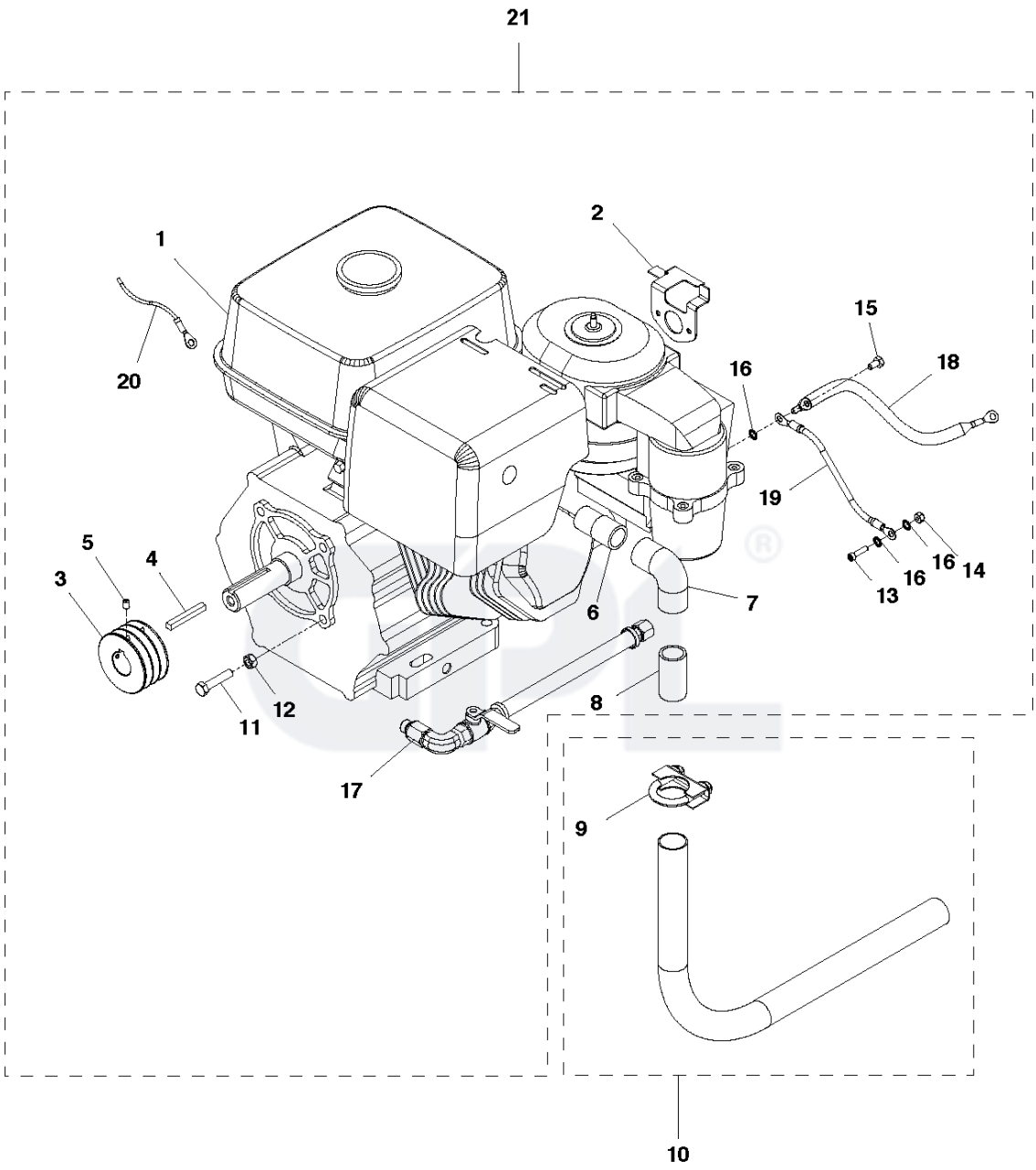

Ref	Part No	Description	Remark	QTY	KIT
1	577 96 12-02	ENGINE		1	21
2	505 74 13-01	REMOTE CHOKE BRACKET(MODIFIED)		1	21
3	505 74 01-01	PULLEY		1	21
4	539 91 02-10	KEY		1	21
5	542 02 05-41	SHSS,.25-20 X.375 CUP HK/CONCR		4	21
6	505 61 14-01	EX NIPPLE FOR X2500 GROUND DOW		1	21
7	505 74 30-01	ELBOW		1	21
8	505 74 29-01	3/4" X 2" NIPPLE GALVANISED (		1	21
9	505 74 32-01	MUFFLER CLAMP 1 1/8"		1	10
10	505 86 78-01	G2000 MUFFLER TUBING		1	
11	505 72 78-01	HEX BOLT 5/16-24-1 1/2 CAD GR		2	21
12	505 73 28-01	5/16-24 HEX JAM NUT ZINC		2	21
13	505 72 95-01	SHC 10-24 X 3/4 SS(G1 BATTERY)		1	21
14	505 63 04-01	NYLOC NUT #10-24 CAD.PL.		1	21
15	725 23 66-71	SCREW EHHM		1	21
16	505 73 18-01	LK WASH 1/4 EXT TOOTH		3	21
17	505 85 75-05	KIT		1	21
18	575 44 66-03	KIT		1	21
19	575 44 66-04	KIT		1	21
20	575 47 79-01	HARNESS		1	21
21	510 27 16-05	ASSEMBLY	Assembled	1	

GPL®

G SOFF CUT X2500
FRONT WHEEL CARRIAGE

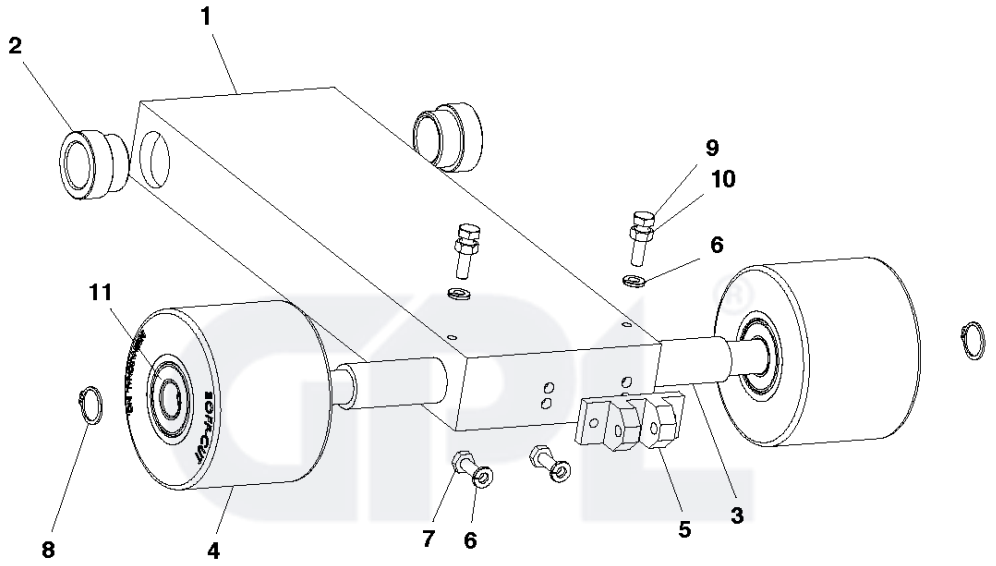

Ref	Part No	Description	Remark	QTY KIT
1	505 60 72-01	FRONT WHEEL CARRIAGE		1
2	505 65 51-01	DELRIN BUSHING - AXLE		2
3	505 71 39-01	AXLE		1
4	505 86 62-01	G2000 4 X 3 FRONT WHEEL		2
5	505 70 62-01	ACTUATOR		1
6	505 63 28-01	LK WASH 1/4 SPLIT SS		4
7	505 62 74-01	HEX BOLT 1/4-20-5/8 S.S.		2
8	505 73 35-01	SNAP RING		2
9	505 72 73-01	HEX BOLT 1/4-20-1 STAINLESS ST		2
10	505 63 19-01	JAM NUT 1/4-20 STAINLESS STEEL		2
11	505 73 61-01	FRONT WHL G2/ BLK SEAL SGL LIP		4

GPL®

N SOFF CUT X2500
GUIDE ARM ASSEMBLY

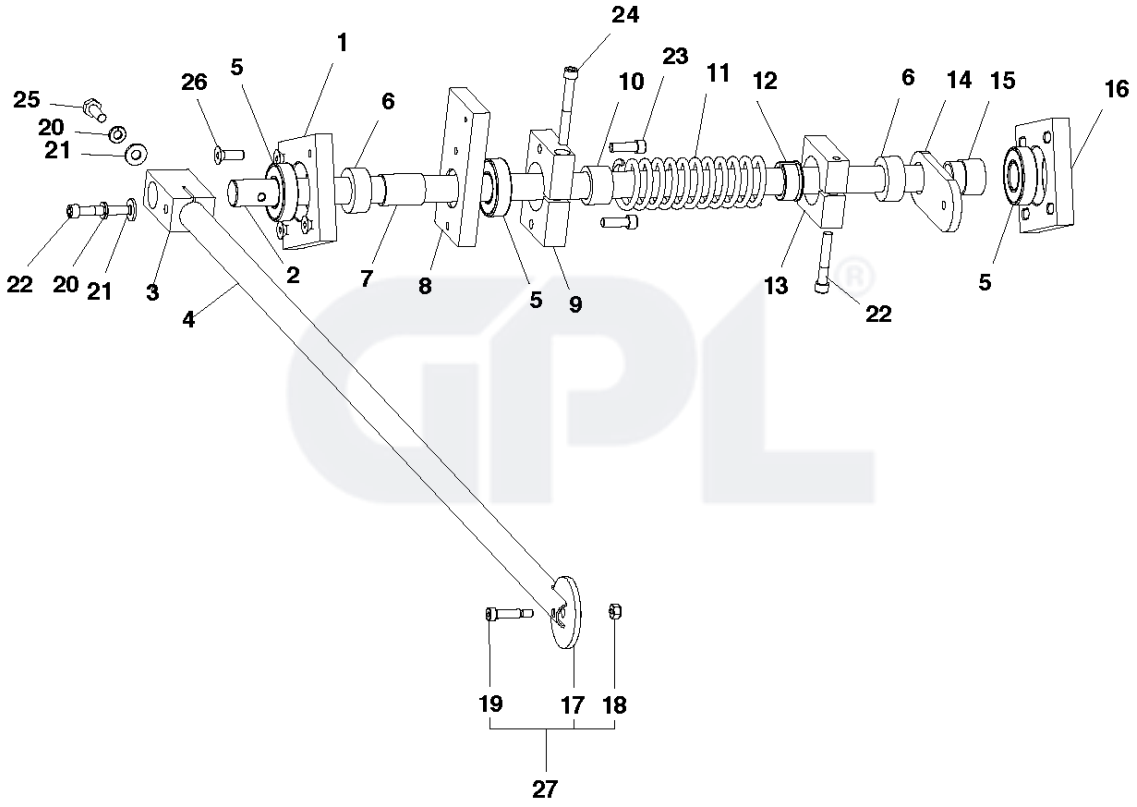

Ref	Part No	Description	Remark	QTY	KIT
1	505 71 37-01	PLATE MOUNTING GUIDE ARM		1	
2	505 71 36-01	SHAFT. GUIDE ARM 3/4" DIA		1	
3	505 70 70-01	BLOCK TUBE MTG G.A.		1	
4	505 71 35-01	TUBE. GUIDE ARM		1	
5	505 73 61-01	FRONT WHL G2/ BLK SEAL SGL LIP		3	
6	505 71 84-01	SHAFT. COLLAR 3/4"		2	
7	505 71 62-01	BUSHING		1	
8	505 71 71-01	SPRING		1	
9	505 71 72-01	BLOCK		1	
10	505 71 75-01	BUSHING		1	
11	505 73 75-01	SPRING		1	
12	505 71 74-01	BUSHING		1	
13	505 71 73-01	BLOCK		1	
14	505 71 91-01	PLATE.HOOD SUPPORT		1	
15	505 71 93-01	BUSHING DELRIN.HOOD SUPPORT		1	
16	505 71 38-01	PLATE MOUNT/GUIDE ARM ADJ.		1	
17	505 61 42-01	G.M.WHEEL (YEL)		1	27
18	505 63 04-01	NYLOC NUT #10-24 CAD.PL.		1	27
19	505 72 58-01	SHSB 1/4 X 3/4 BLK STL		1	27
20	505 63 28-01	LK WASH 1/4 SPLIT SS		2	
21	505 63 20-01	WASHER		2	
22	505 72 88-01	SHC 1/4-20-1 1/2 S.S.		2	
23	505 62 78-01	SHC 1/4-20-3/4 S.S.		2	
24	505 72 89-01	SHC 1/4-20-2 S.S.		1	
25	505 62 75-01	HEX BOLT 1/4-20-3/4 S.S.		1	
26	505 62 86-01	FHS 1/4-20-3/4 S.S.		4	
27	505 87 77-01	G2000 GUIDE TUBE WHEEL		1	

T SOFF CUT X2500
HOOD ASSEMBLY

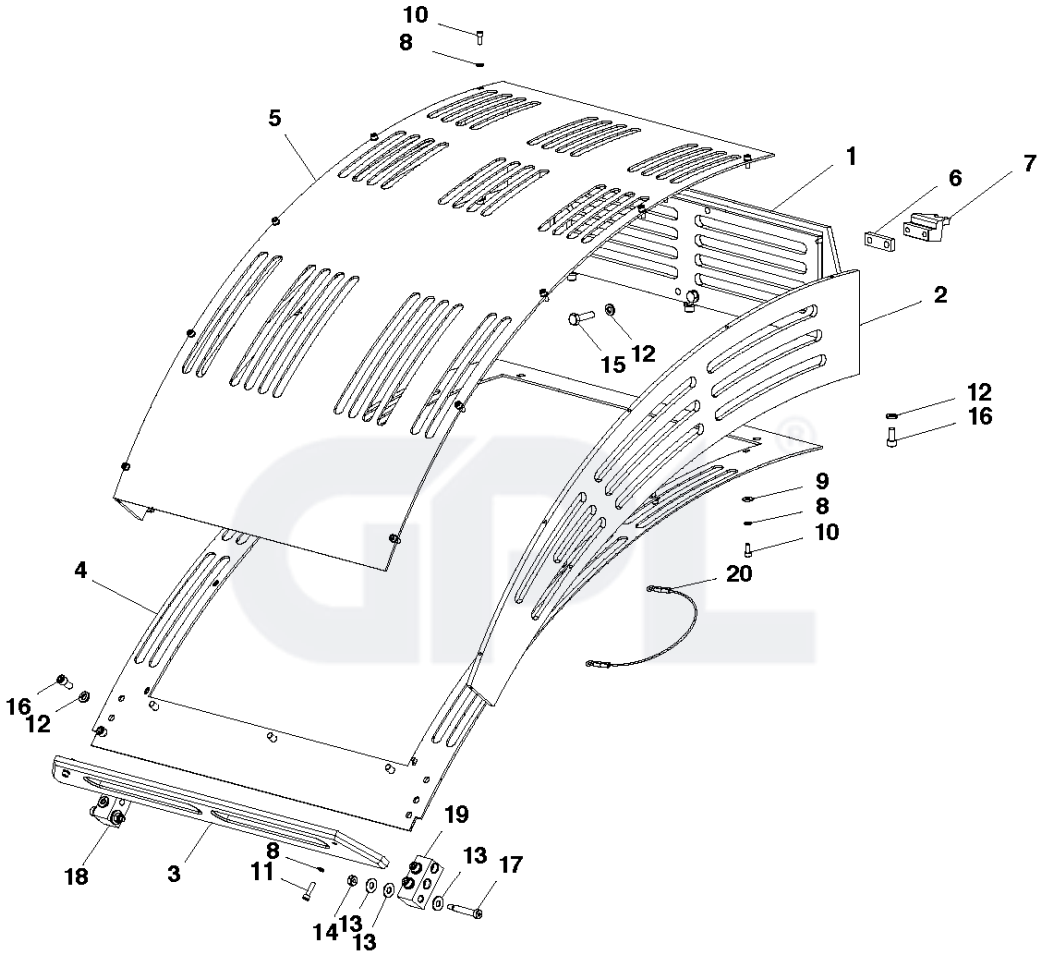

Ref	Part No	Description	Remark	QTY KIT
1	505 71 25-01	REAR PLATE HOOD		1
2	505 60 85-01	SIDE HOOD PANEL		2
3	505 71 24-01	FRONT PLATE HOOD		1
4	505 60 84-01	HOOD		1
5	505 60 83-01	HOOD		1
6	505 64 34-01	SPACER		1
7	505 71 95-01	BLOCK.HOOD LATCH		1
8	505 63 27-01	LK WASH #8 SPLIT S.S.		24
9	505 82 26-01	FLAT WASH. #8 SAE 18-8 SS		10
10	505 62 81-01	SHC 8-32 X 3/8 S.S.		20
11	505 72 91-01	SHC 8-32-5/8 S.S.		4
12	505 63 28-01	LK WASH 1/4 SPLIT SS		12
13	505 63 44-01	WASHER		6
14	505 63 04-01	NYLOC NUT #10-24 CAD.PL.		2
15	505 72 73-01	HEX BOLT 1/4-20-1 STAINLESS ST		2
16	505 72 23-01	SHC 1/4-20-1/2 S.S		10
17	505 81 17-01	SHSB 1/4 X 1 1/4		2
18	505 71 31-01	BLOCK. HOOD MOUNTING (RIGHT)		1
19	505 71 30-01	BLOCK. HOOD MOUNTING (LEFT)		1
20	505 86 52-01	X2500 HOOD STOP WIRE		1

GPL®

P SOFF CUT X2500
MAINFRAME ASSEMBLY

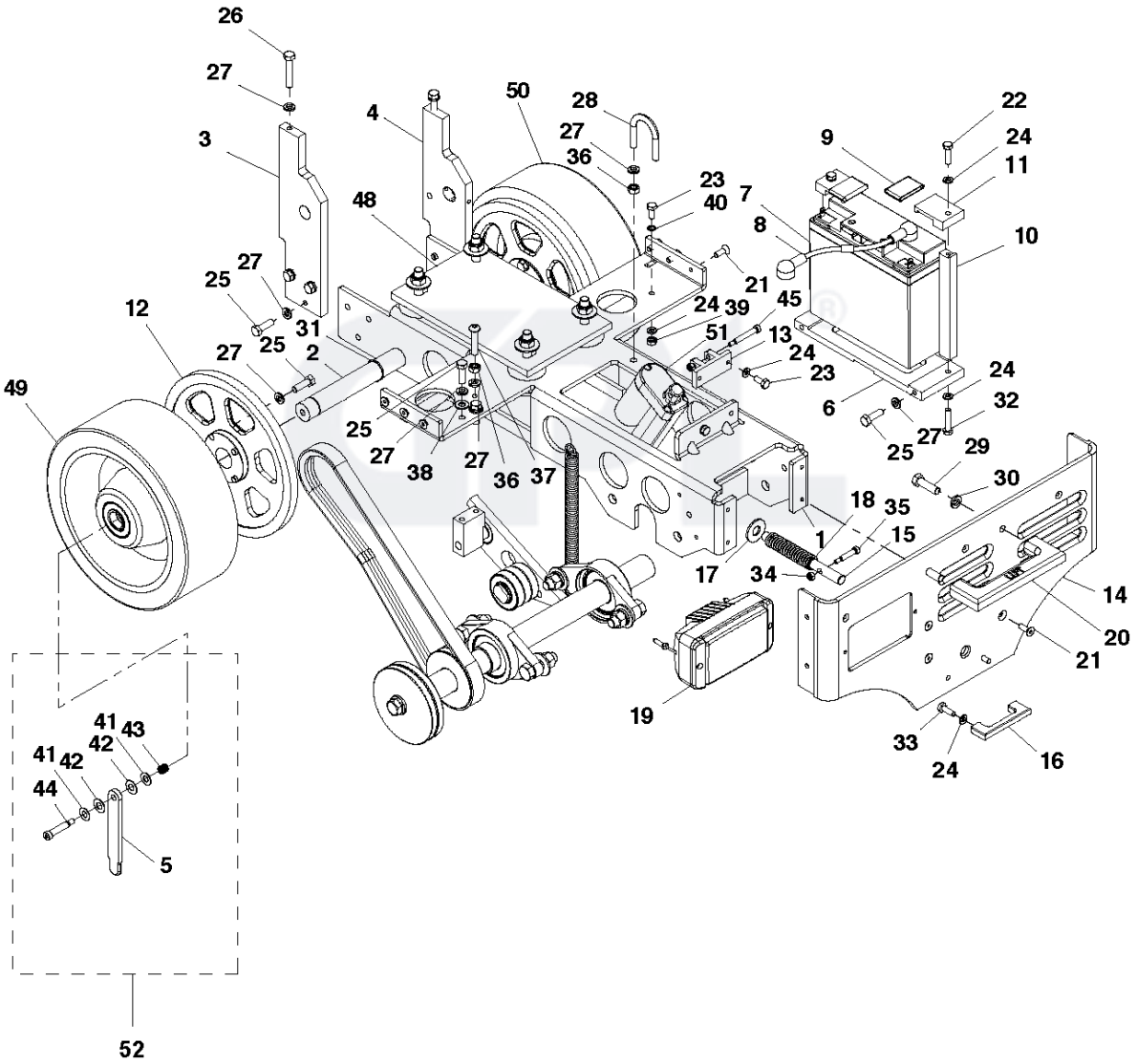

Ref	Part No	Description	Remark	QTY KIT
1	505 60 94-01	MAINFRAME. CE		1
2	505 60 54-01	AXLE		1
3	505 70 53-01	PUMP SUPPORT ARM (RIGHT)		1
4	505 60 74-01	PUMP SUPPORT ARM LEFT		1
5	505 71 85-01	REAR GUIDE ARM		1
6	505 71 40-01	BATTERY SUPPORT PLATE		1
7	505 74 99-01	BATTERY		1
8	575 47 78-01	WIRE ASSY		1
9	505 74 70-01	BATTERY CLAMP COVERS(BLACK)(2)		2
10	505 71 80-01	ARM		2
11	505 71 81-01	BLOCK.BATTERY G2000 & GS1000		2
12	505 86 50-01	X2500 REAR WHEEL GEAR		2
13	505 70 66-01	ACT. BRKT AGLE /HDLE/MN FRAME		1
14	505 60 52-01	FRONT PLATE		1
15	505 71 41-01	SHAFT		1
16	505 71 42-01	GUARD ARBOR LOCK SHAFT		1
17	505 73 14-01	FLAT WASH 1/2 X 1 1/4 O.D. S.S		1
18	505 73 74-01	SPRING		1
19	505 48 50-01	HEADLAMP		1
20	505 71 69-01	HANDLES		1
21	505 62 86-01	FHS 1/4-20-3/4 S.S.		10
22	505 72 73-01	HEX BOLT 1/4-20-1 STAINLESS ST		2
23	505 62 74-01	HEX BOLT 1/4-20-5/8 S.S.		3
24	505 63 28-01	LK WASH 1/4 SPLIT SS		9
25	539 99 02-09	SCREW		18
26	505 72 85-01	HEX BOLT 5/16-18 X 1 3/4 GRADE		2
27	505 63 30-01	LK WASH 5/16 SPLIT SS		23
28	575 42 13-01	CLAMP		1
29	539 97 69-41	SCREW		2
30	505 73 10-01	LK WASH 3/8 SPLIT SS		2
31	542 20 62-05	SNAP RING		3
32	505 72 74-01	HEX BOLT 1/4-20 X 1 1/4 GR. 8		2
33	505 62 75-01	HEX BOLT 1/4-20-3/4 S.S.		2
34	505 63 04-01	NYLOC NUT #10-24 CAD.PL.		2
35	505 72 59-01	SHSB 1/4 X 1 BLK STL		1
36	505 73 24-01	NUT		3
37	505 72 28-01	BHS 5/16-18-1 1/2 S.S.		1
38	539 99 01-88	WASHER		2
39	505 63 19-01	JAM NUT 1/4-20 STAINLESS STEEL		1
40	505 73 18-01	LK WASH 1/4 EXT TOOTH		1
41	505 72 52-01	WASHER		2
42	505 63 45-01	FLAT WSHR .750X.379 X.031 DEL		2
43	505 63 60-01	SPRING		1
44	505 72 66-01	SHSB 5/16 X 1 1/4 BLK STL		1
45	505 72 60-01	SHSB 1/4 X 1 1/2 BLK STL		1
48	505 85 78-01	SNUBBING MOTOR MNT KIT		1
49	505 86 53-01	X2500 RIGHT REAR WHEEL		1
50	505 86 54-01	X2500 LEFT REAR WHEEL		1
51	505 84 47-01	BLADE		1
52	505 85 79-01	REAR GUIDE ARM FOR G2000		1

B SOFF CUT X2500
MOTOR MOUNT BUSHING

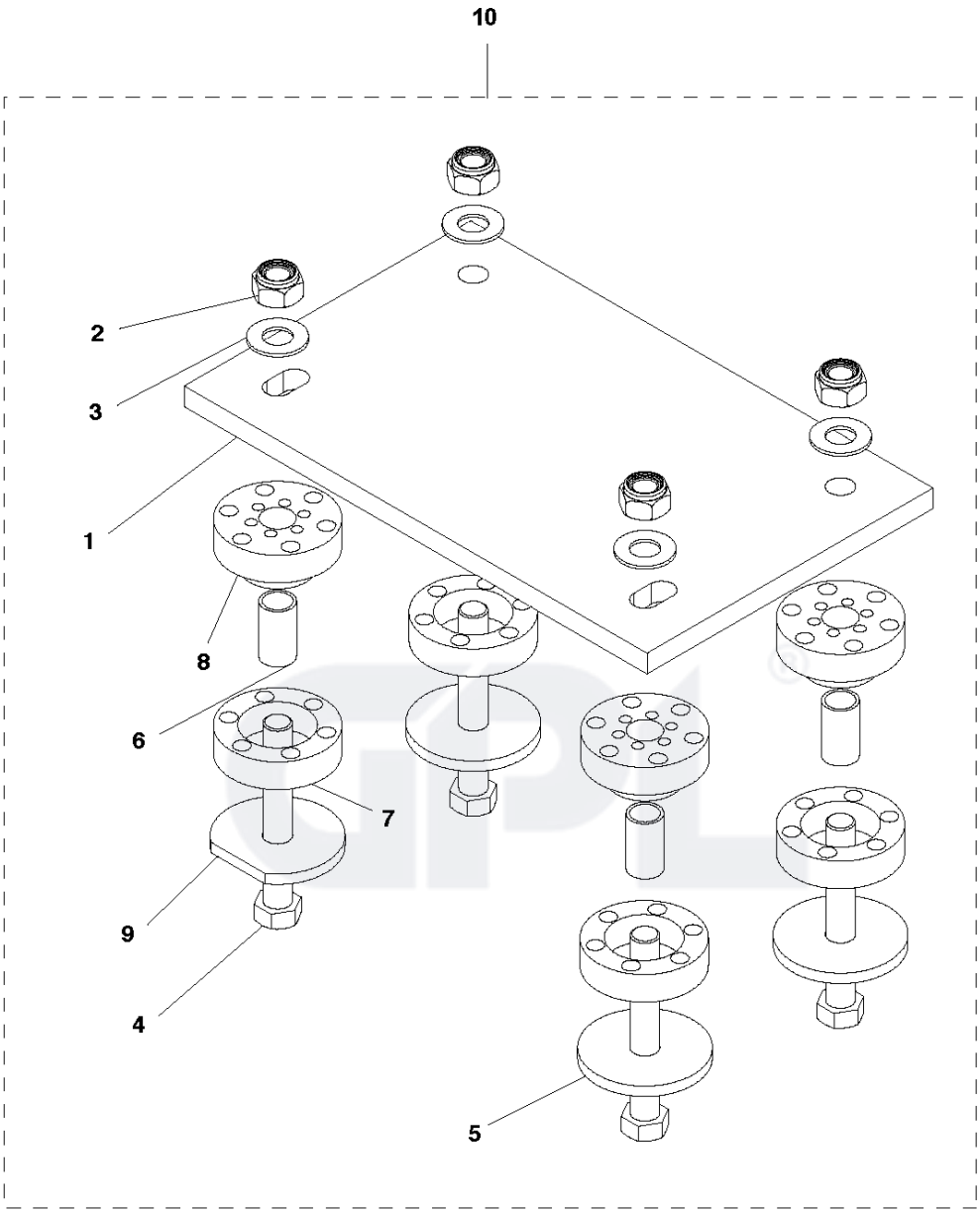

Ref	Part No	Description	Remark	QTY	KIT
1	505 60 92-02	PLATE		1	10
2	541 20 57-26	NUT		4	10
3	510 30 21-01	WASHER		4	10
4	510 31 76-01	HEX BOLT 7/16-14 X 3 1/4 GRD 8		4	10
5	505 60 99-01	SNUBBING WASHER (X2509)		3	10
6	505 60 98-01	SPACER		4	10
7	505 61 02-01	RING		4	10
8	505 61 03-01	BUSHING		4	10
9	505 61 01-01	SNUBBING WASHER W/FLAT (X2509)		1	10
10	505 85 78-01	SNUBBING MOTOR MNT KIT		1	

GPL®

C SOFF CUT X2500
OIL DRAIN

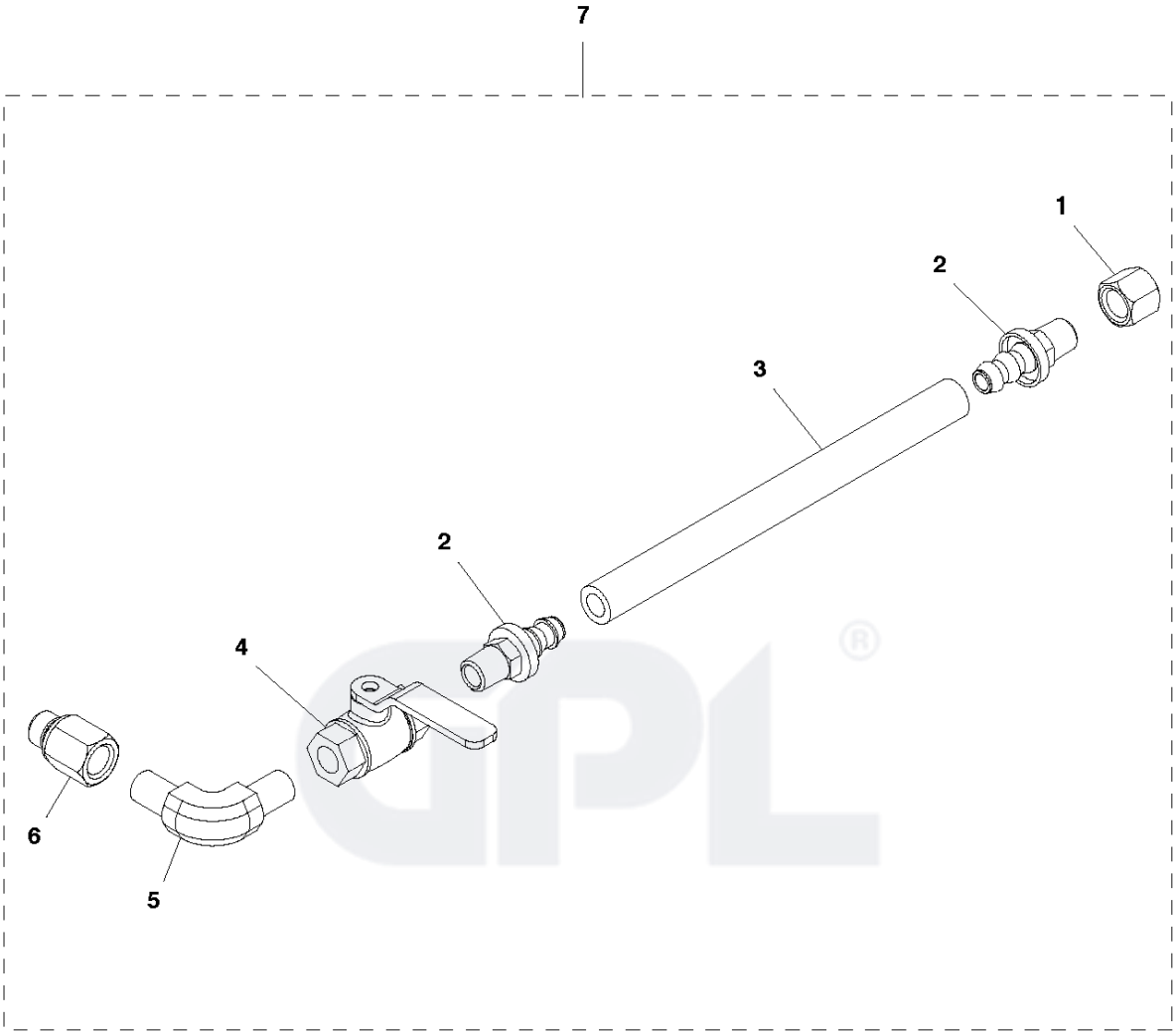

Ref	Part No	Description	Remark	QTY	KIT
1	505 77 66-01	DUST CAP FOR OIL DRAIN-RP85123		1	7
2	505 73 86-01	GATES 6LOC-4RMP PUSH ON FITTIN		2	7
3	505 73 85-01	GATES 6 LOLA+ 3/8 I.D. HOSE		1	7
4	505 73 89-01	LHA BALL VALVE BV-04N		1	7
5	505 73 87-01	HCI ADAPTER MP-MP90-4-4		1	7
6	505 73 88-01	PM0412 1/4 NPT TO 12MM METRIC		1	7
7	505 85 75-05	KIT		1	

GPL®

S SOFF CUT X2500
PANEL ASSEMBLY

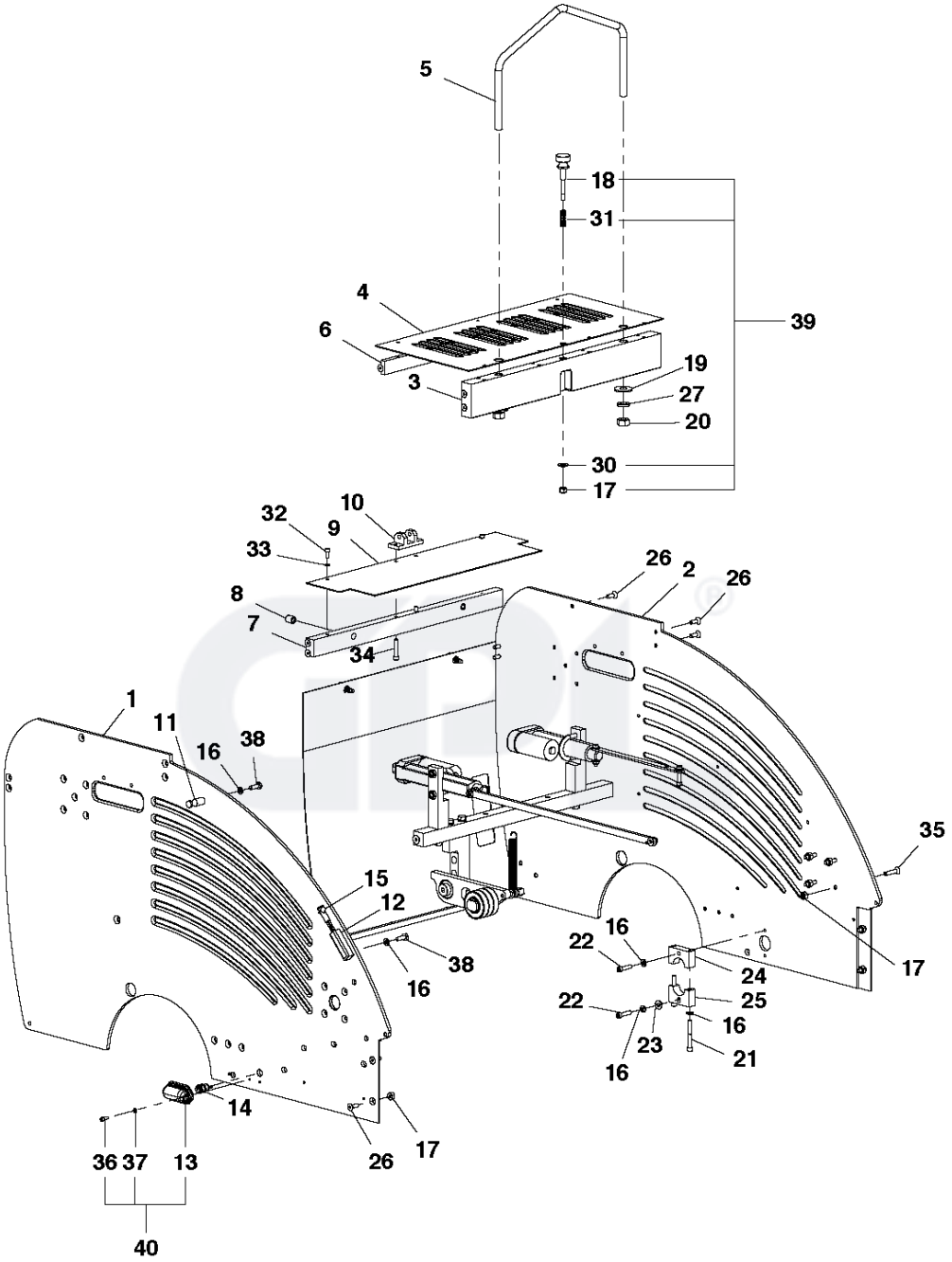

Ref	Part No	Description	Remark	QTY KIT
1	505 60 65-01	SIDE PLATE (RIGHT)		1
2	505 60 66-01	SIDE PLATE (LEFT)		1
3	505 60 69-01	CROSSBAR		1
4	505 60 68-01	PAN		1
5	505 60 70-01	LIFTING HOOK		1
6	505 70 86-01	CROSS BAR (SIDE PANEL SUPPORT)		1
7	505 70 85-01	CROSS BAR (REAR ACCESS PANEL)		1
8	505 74 83-01	THREADED INSERT S.S.		3
9	505 70 73-01	PANEL. COVER (HANDLE ACT. CROS		1
10	505 70 65-01	ACTUATOR		1
11	505 71 86-01	ROD G.A. STOP		1
12	505 71 77-01	HOUSING		1
13	505 75 25-01	LIGHT. SIDE		1
14	505 78 78-01	SENSOR FOR FPM GAUGE		1
15	505 84 60-01	G2/G1/GX3000 LED LIGHT		1
16	505 63 28-01	LK WASH 1/4 SPLIT SS		6
17	505 63 05-01	NYLOC NUT 1/4-20 CAD PL.		9
18	505 76 72-01	HOOD		1
19	505 73 14-01	FLAT WASH 1/2 X 1 1/4 O.D. S.S		2
20	505 73 33-01	1/2-13 HEX NUT GOLD GR.8		2
21	505 72 89-01	SHC 1/4-20-2 S.S.		2
22	505 62 79-01	SHC 1/4-20-1 S.S.		2
23	505 63 20-01	WASHER		1
24	505 71 67-01	PLATE. MUFFLER EXT. CLP TOP		1
25	505 71 68-01	PLATE. MUFFLER EXT. CLP BOTTOM		1
26	505 62 86-01	FHS 1/4-20-3/4 S.S.		14
27	505 73 11-01	LK WASH 1/2 SPLIT SS		2
30	505 72 55-01	FLAT WASH 1/4 PFC9 SAE ZINC		1
31	505 73 71-01	#520 SPRG THRD KNB/11/21/97		9
32	505 72 96-01	SHC 10-32 X 1/2 S.S. CBL MTS		2
33	505 63 31-01	LK WASH #10 SPLIT SS		2
34	505 62 80-01	SHC 1/4-20-1 1/4 S.S.		2
35	505 77 34-01	1/4-20 X 1 1/4 FLAT SOCKET SS		4
36	505 62 82-01	SHC 8-32 X 1/2 S.S.		2
37	505 63 27-01	LK WASH #8 SPLIT S.S.		2
38	505 62 75-01	HEX BOLT 1/4-20-3/4 S.S.		2
39	505 88 66-01	G2000.G1000.GX3000-HOOD KNOB		1
40	505 48 69-01	LAMP		1

H SOFF CUT 2500
PUMP ASSEMBLY

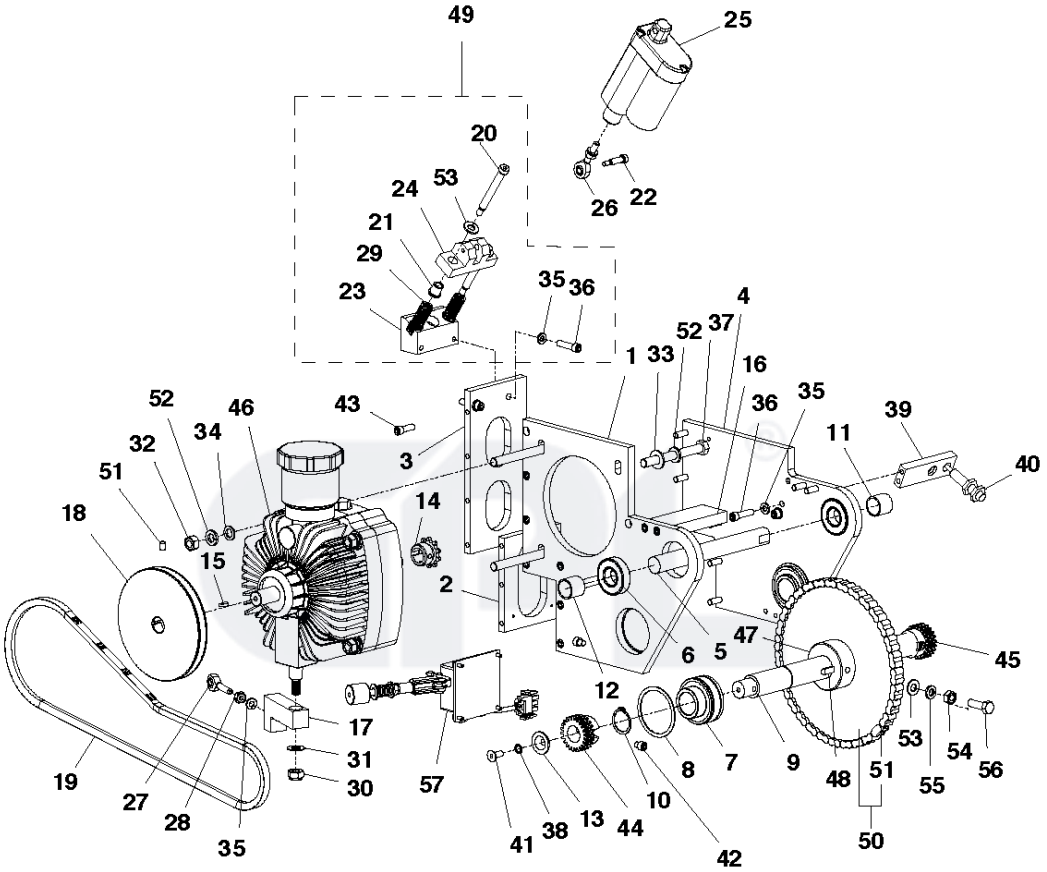

Ref	Part No	Description	Remark	QTY	KIT
1	505 70 59-01	PUMP SUPPORT PLATE(RIGHT)		1	
2	505 70 61-01	PUMP REAR BRACE PLATE		1	
3	505 70 60-01	ACTUATOR		1	
4	505 60 76-01	PUMP SUPPORT PLATE LEFT		1	
5	505 60 55-01	SHAFT		1	
6	505 73 61-01	FRONT WHL G2/ BLK SEAL SGL LIP		2	
7	505 68 94-01	PUMP/DRIVE SHAFT BEARING		2	
8	505 69 02-01	SNAP RING		4	
9	505 60 53-01	DRIVE SHAFT		1	
10	542 20 62-05	SNAP RING		2	
11	505 60 57-01	PUMP SPACER		1	
12	505 71 60-01	BUSHING		1	
13	505 76 48-01	SS WASHER FOR DRIVE SHAFT		2	
14	587 65 99-01	SPROCKET		1	
15	539 30 07-49	KEY, #3 WOODRUFF		1	
16	505 75 67-01	ACTUATOR		1	
17	505 71 49-01	PUMP CONTROL ARM GS1000 & G20		1	
18	505 73 98-01	PULLEY PUMP 1/3V 5.00 X 17 MM		1	
19	505 48 40-04	BELT		1	
20	505 81 19-01	SHSB 5/16 X 2 1/4 (GUIDE)		2	49
21	505 60 22-01	FLANGED SLEEVE BEARING. BRONZE		2	49
22	505 72 58-01	SHSB 1/4 X 3/4 BLK STL		1	
23	505 71 87-01	PUMP SPRING BLOCK G2000 & GS10		1	49
24	580882801	TBD		1	49
25	505 84 46-01	ACTUATOR		1	
26	505 74 34-01	ROD END 1/4" PLATED		1	
27	505 74 34-01	ROD END 1/4" PLATED		1	
28	505 73 29-01	1/4-28 HEX JAM NUT ZINC		2	
29	505 60 29-01	SPRING		2	49
30	539 97 69-79	NUT		1	
31	505 63 42-01	FLAT WSHR.750 X .375 X .031 SS		1	
32	539 99 01-30	NUT		4	
33	539 99 05-17	WASHER		4	
34	505 72 40-01	FLAT WASH 3/8 AN 960 WASHERS U		4	
35	505 63 28-01	LK WASH 1/4 SPLIT SS		6	49
36	505 62 79-01	SHC 1/4-20-1 S.S.		4	49
37	505 72 77-01	HEX BOLT 3/8-16-3 1/2 CAD GR 5		4	
38	505 73 18-01	LK WASH 1/4 EXT TOOTH		2	
39	505 60 75-01	SENSOR BRACKET		1	
40	505 75 41-01	PROX SW/COUNTER		1	
41	505 73 05-01	FHS 1/4-20 X 5/8 SS		2	
42	505 77 27-01	1/4-20 X 1/4 SHCS SS		4	
43	505 62 78-01	SHC 1/4-20-3/4 S.S.		17	
44	505 77 71-01	1623 SPR GER/1 1/2-3")LEFT SID		1	
45	505 60 24-01	S1622 SPUR GEAR		1	
46	505 73 83-01	HYDROSTATIC PUMP		1	
47	505 73 94-01	SPROCKET		1	
48	510 31 81-01	KEY		1	
49	505 88 29-01	X2500 PUMP SPRING BLOCK		1	
50	505 86 72-01	G2/G1000 DRIVE CHAIN 26"		1	
51	542 02 05-41	SHSS,.25-20 X.375 CUP HK/CONCR		2	
52	505 73 10-01	LK WASH 3/8 SPLIT SS		8	
53	539 99 01-88	WASHER		3	49
54	539 99 01-30	NUT		1	
55	505 63 30-01	LK WASH 5/16 SPLIT SS		1	
56	539 99 02-09	SCREW		1	
57	505 84 51-01	SPEED CONTROL ACT. FOR ALL GAS		1	

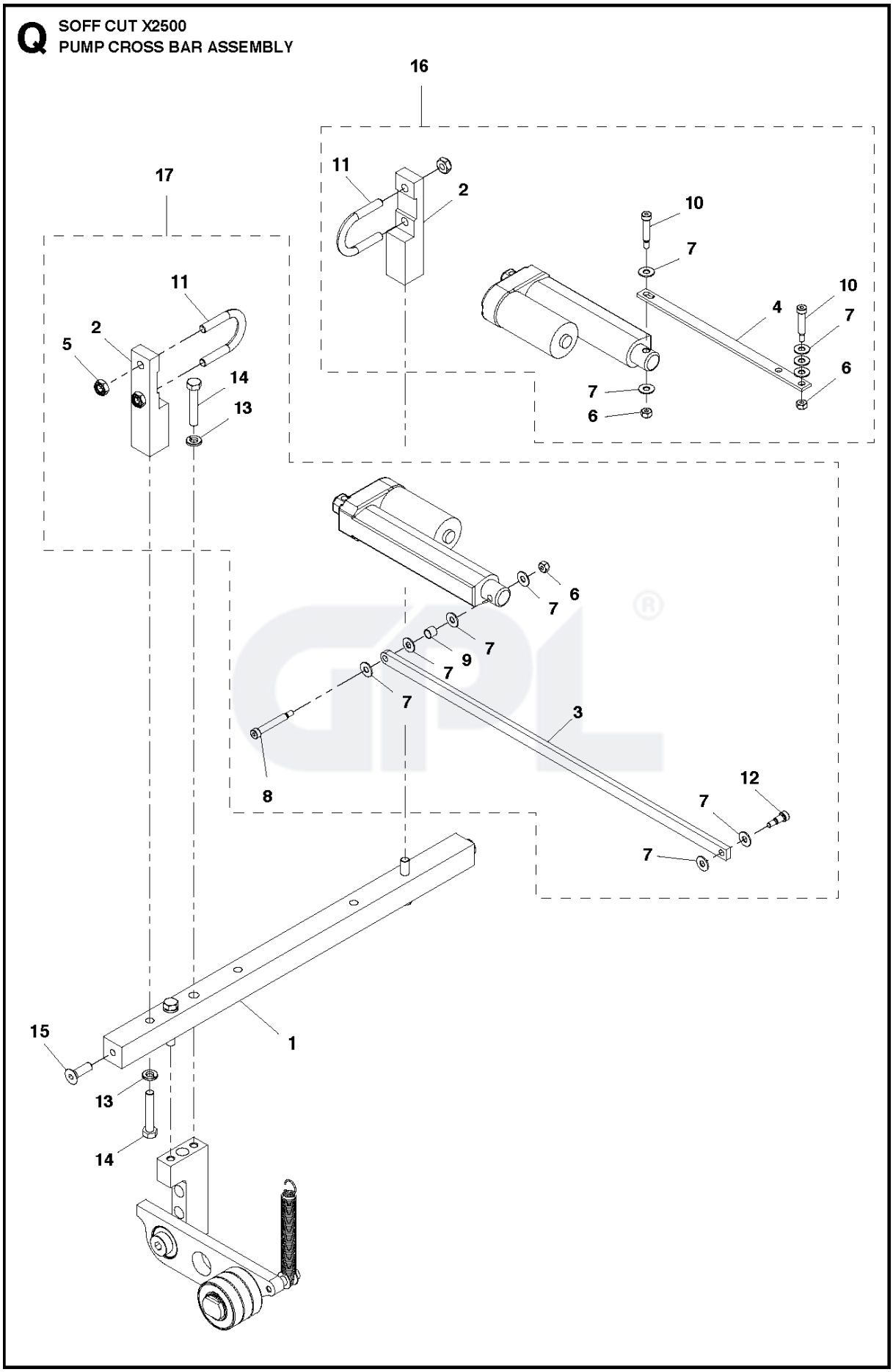
Q
SOFF CUT X2500
PUMP CROSS BAR ASSEMBLY
16
17
11
2
10
7
4
6
5
14
13
3
8
9
12
15
1

Ref	Part No	Description	Remark	QTY	KIT
1	505 60 58-01	CROSSBAR		1	
2	505 61 10-01	ACTUATOR		2	17
3	505 61 11-01	ACTUATOR		1	17
4	505 71 58-01	G2/X2500 THRTLE ARM W/SLOT		1	16
5	505 63 17-01	NYLOC NUT 5/16-18 .265"HT.		4	17
6	505 63 04-01	NYLOC NUT #10-24 CAD.PL.		3	16,17
7	505 63 44-01	WASHER		11	16
8	505 72 60-01	SHSB 1/4 X 1 1/2 BLK STL		1	17
9	505 71 79-01	BUSHING.G.A.(.315 SPACER)		1	17
10	505 72 59-01	SHSB 1/4 X 1 BLK STL		2	16
11	575 42 13-01	CLAMP		2	16,17
12	505 68 64-01	SHSB 1/4 X 3/8 BLK STL		1	17
13	505 63 30-01	LK WASH 5/16 SPLIT SS		4	17
14	505 72 85-01	HEX BOLT 5/16-18 X 1 3/4 GRADE		4	17
15	505 73 01-01	FHS 5/16-18-1 S.S.		2	
16	505 84 48-01	ACTUATOR		1	
17	505 84 50-01	ACTUATOR		1	

E SOFF CUT X2500
PUMP IDLER PULLEY

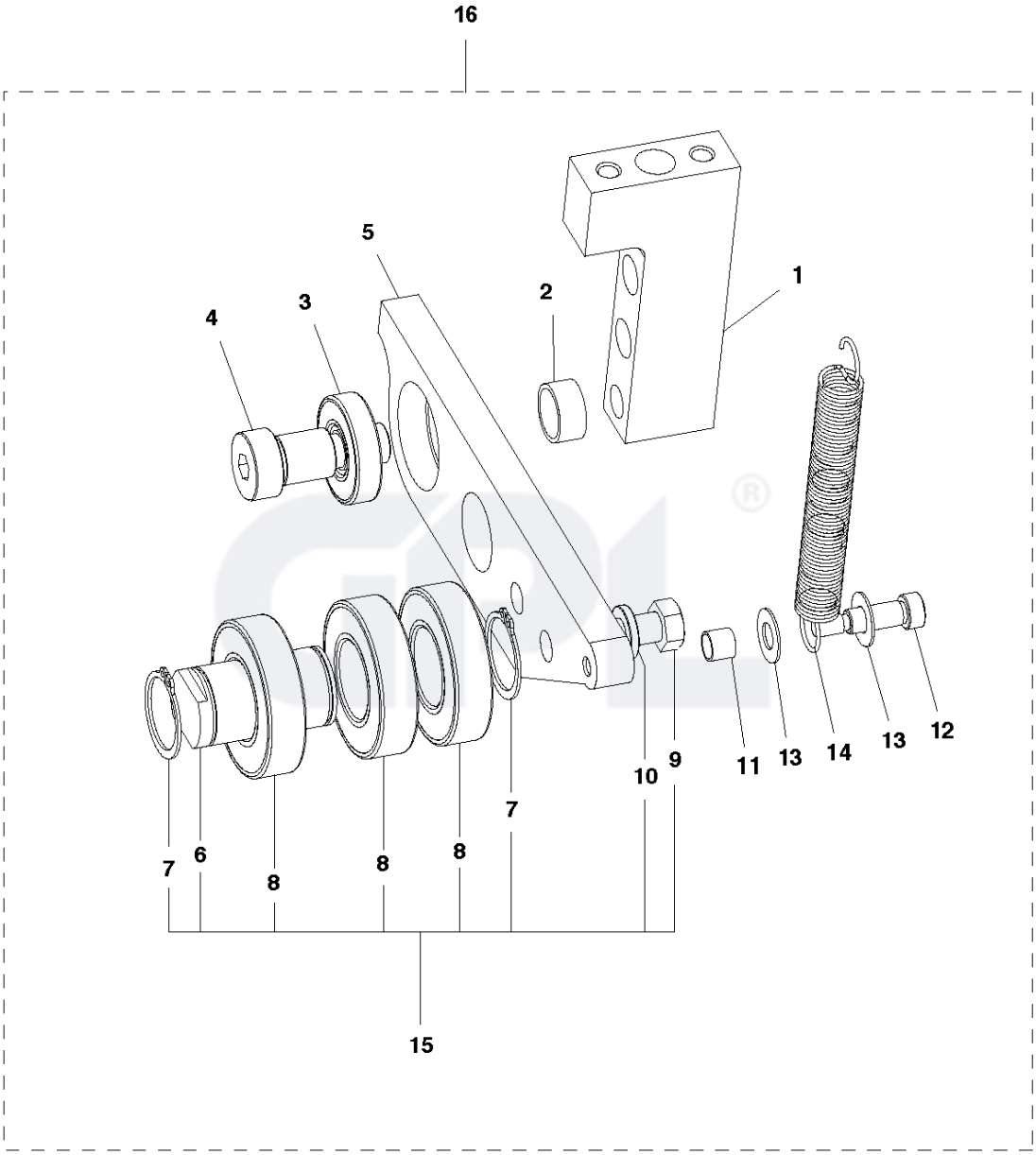

Ref	Part No	Description	Remark	QTY	KIT
1	505 71 44-01	MTG BLOCK PUMP IDLER PULLEY		1	16
2	505 71 46-02	SPACER		1	16
3	505 73 60-01	IDLER PULLEYS BLK SEAL SGL LIP		1	16
4	505 72 62-01	SHSB 5/8 X 3/4 BLK STL		1	16
5	505 70 69-01	PUMP ARM IDLER PULLEY		1	16
6	505 70 68-01	SHAFT. BLADE BELT TENSIONER (P		1	15,16
7	542 20 62-05	SNAP RING		2	15,16
8	505 73 63-01	10"WHEEL/ BLK SEAL SINLE LIP		3	15,16
9	539 97 69-41	SCREW		1	15,16
10	505 73 10-01	LK WASH 3/8 SPLIT SS		1	15,16
11	505 71 79-01	BUSHING.G.A.(.315 SPACER)		1	16
12	505 72 64-01	SHSB 5/16 X 3/4 BLK STL		1	16
13	505 72 52-01	WASHER		2	16
14	505 73 79-01	SPRING		1	16
15	505 48 34-01	PULLEY		1	16
16	505 85 74-01	G2000 & G3000 PUMP PULLEY KIT		1	

R SOFF CUT X2500
REAR ACCESS ASSEMBLY

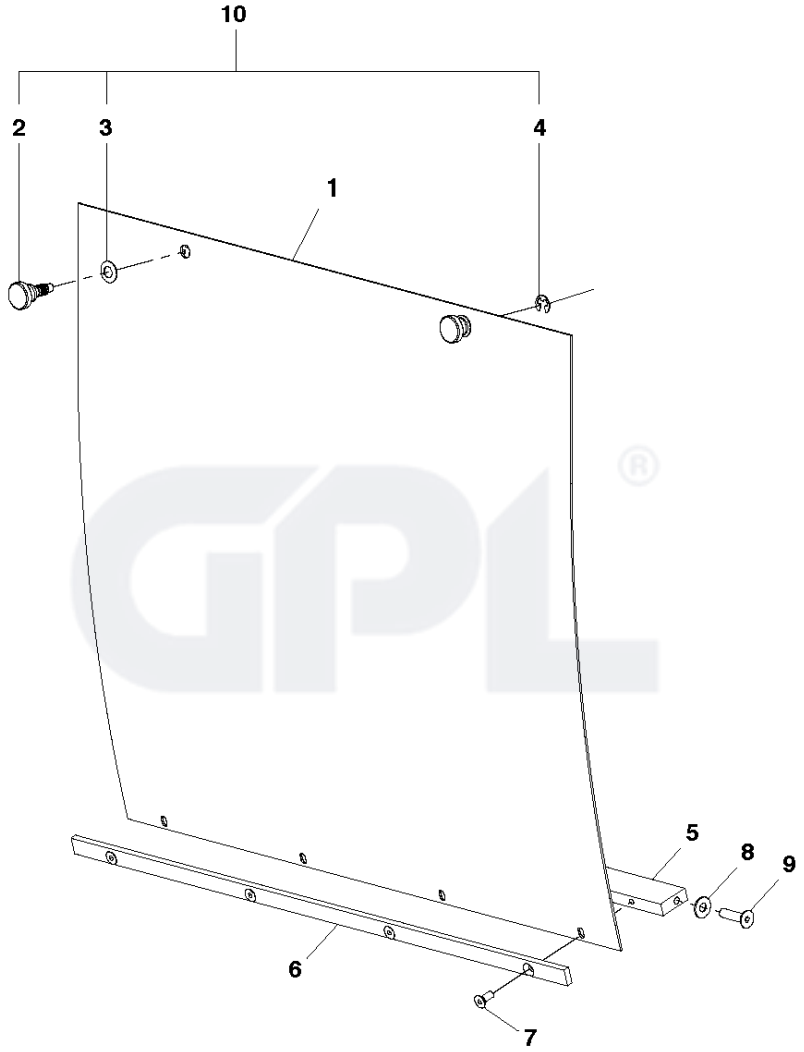

Ref	Part No	Description	Remark	QTY KIT
1	505 60 96-01	PANEL. REAR ACCESS. CE		1
2	505 53 63-01	KNOB		2
3	505 53 64-01	WASHER		2
4	505 53 65-01	E-CLIP		2
5	505 71 70-01	CROSSBAR		1
6	505 71 94-01	REAR ACCESS PANEL BRACE		1
7	505 72 99-01	FHS 10-32-1/2 S.S.		4
8	505 63 44-01	WASHER		2
9	505 62 87-01	FHS 1/4-20-1 S.S.		2
10	505 48 29-01	KNOB		1

GPL®

J SOFF CUT X2500
SPEED CONTROL ACTUATOR

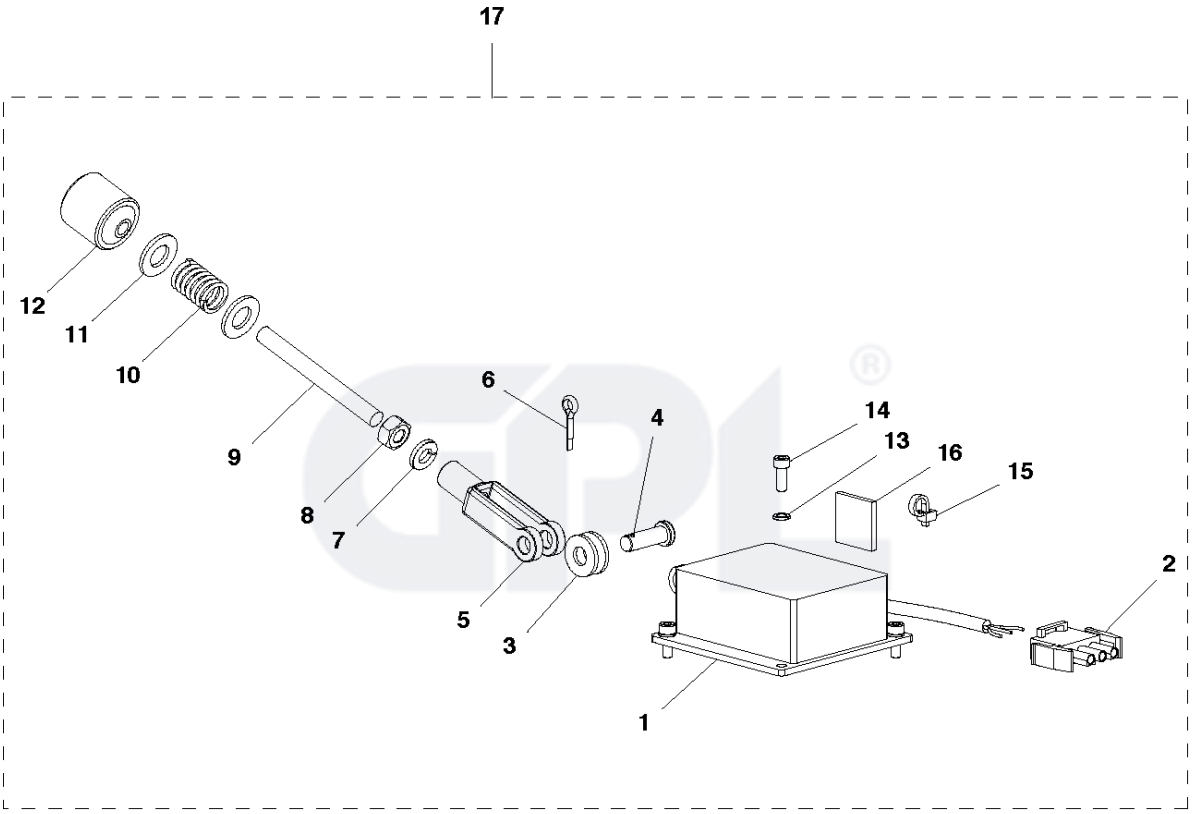

Ref	Part No	Description	Remark	QTY	KIT
1	505 84 51-01	SPEED CONTROL ACT. FOR ALL GAS		1	17
2	505 75 16-01	CONN 3 PIN PLUG		1	17
3	505 63 20-01	WASHER		2	17
4	505 74 35-01	CLEVIS		1	17
5	505 74 33-01	YOKE END FEM.THD		1	17
6	505 73 97-01	COTTER PIN		1	17
7	505 63 28-01	LK WASH 1/4 SPLIT SS		1	17
8	505 73 29-01	1/4-28 HEX JAM NUT ZINC		1	17
9	505 77 08-01	1/4-28 X 2 1/2 STUD-SPD CTRL		1	17
10	505 77 51-01	#510 SPRG FOR STUD/SPD CTRL		1	17
11	505 72 55-01	FLAT WASH 1/4 PFC9 SAE ZINC		2	17
12	505 75 52-01	ADJUSTER		1	17
13	505 63 24-01	LK WASH #6 SPLIT S.S.		4	17
14	505 62 76-01	SHC 6-32 X 3/8 S.S.		4	17
15	510 33 17-01	TIE WRAP		1	17
16	510 33 16-02	TIE WRAP		1	17
17	505 84 51-01	SPEED CONTROL ACT. FOR ALL GAS		1	