Husqvarna®

SPARE PARTS LIST

EARLY ENTRY SAWS

SOFF CUT 2500, 2022-06

A SOFF CUT X2500
ENGINE ASSEMBLY

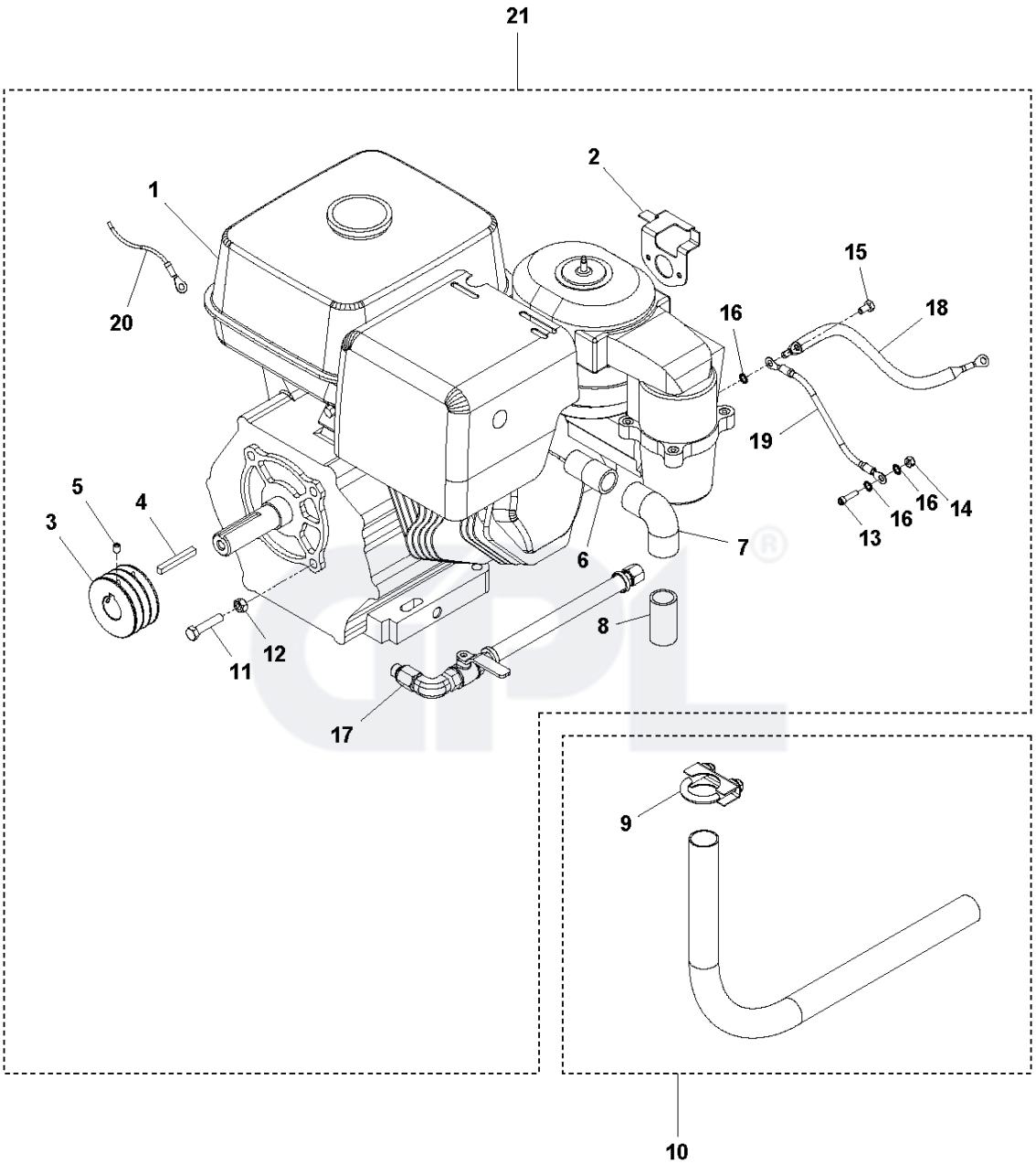

Ref	Part No	Description	Remark	QTY	KIT
1	577 96 12-02	ENGINE		1	21
2	505 74 13-01	BRACKET		1	21
3	589421201	TBD	Kit, Pulley + 2 set screws	1	21
4	539 91 02-10	KEY		1	21
5	542 02 05-68	SCREW	SHSS, .25-20 x .375 HK	2	21
6	505 61 14-01	NIPPLE		1	21
7	505 74 30-01	ELBOW		1	21
8	505 61 13-01	EXHAUST NIPPLE FOR X2500		1	21
9	505 74 32-01	CLAMP		1	10
10	505 86 78-01	MUFFLER		1	
11	505 72 78-01	BOLT		2	21
12	505 73 28-01	NUT		2	21
13	505 62 74-01	BOLT	HHB, 1/4-20 X 5/8 S.S.	1	21
14	505 63 19-01	NUT	NUT, JAM .25-20 S.S.	1	21
15	725 23 66-71	SCREW EHHM		1	21
16	505 73 18-01	WASHER		3	21
17	505 85 75-05	KIT		1	21
18	575 44 66-03	KIT		1	21
19	575 44 66-04	KIT		1	21
20	505 84 43-01	CABLE		1	21
21	510 27 16-05	ASSEMBLY	Assembled	1	

GPL®

B **SOFF CUT X2500**
MOTOR MOUNT BUSHING

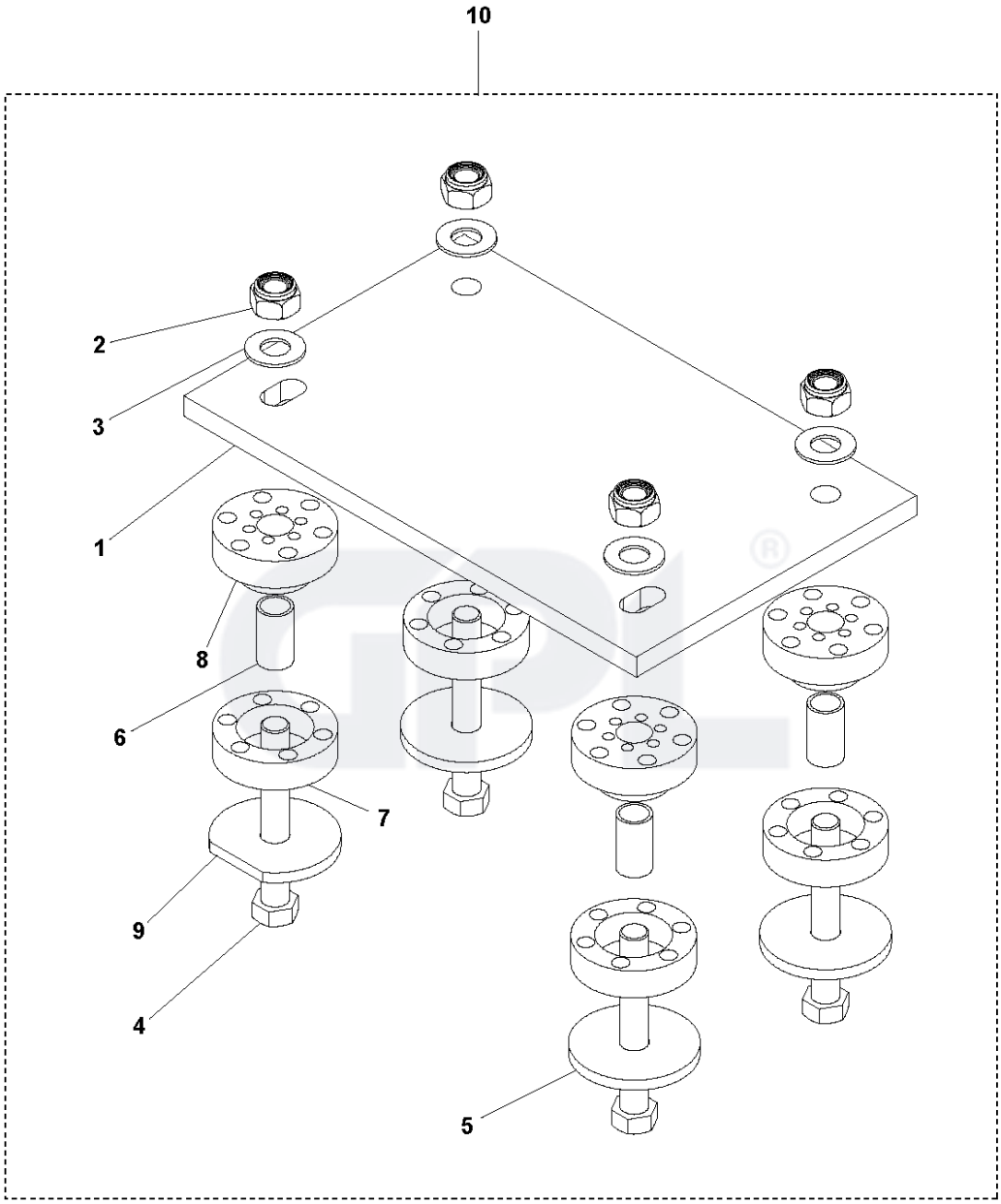

Ref	Part No	Description	Remark	QTY	KIT
1	505 60 92-02	PLATE		1	10
2	541 20 57-26	NUT		4	10
3	510 30 21-01	WASHER		4	10
4	510 31 76-01	BOLT		4	10
5	505 60 99-01	WASHER		3	10
6	505 60 98-01	SPACER		4	10
7	505 61 02-01	RING		4	10
8	505 61 03-01	BUSHING		4	10
9	505 61 01-01	WASHER		1	10
10	505 85 78-01	PLATE KIT		1	

GPL®

C **SOFF CUT X2500**
OIL DRAIN

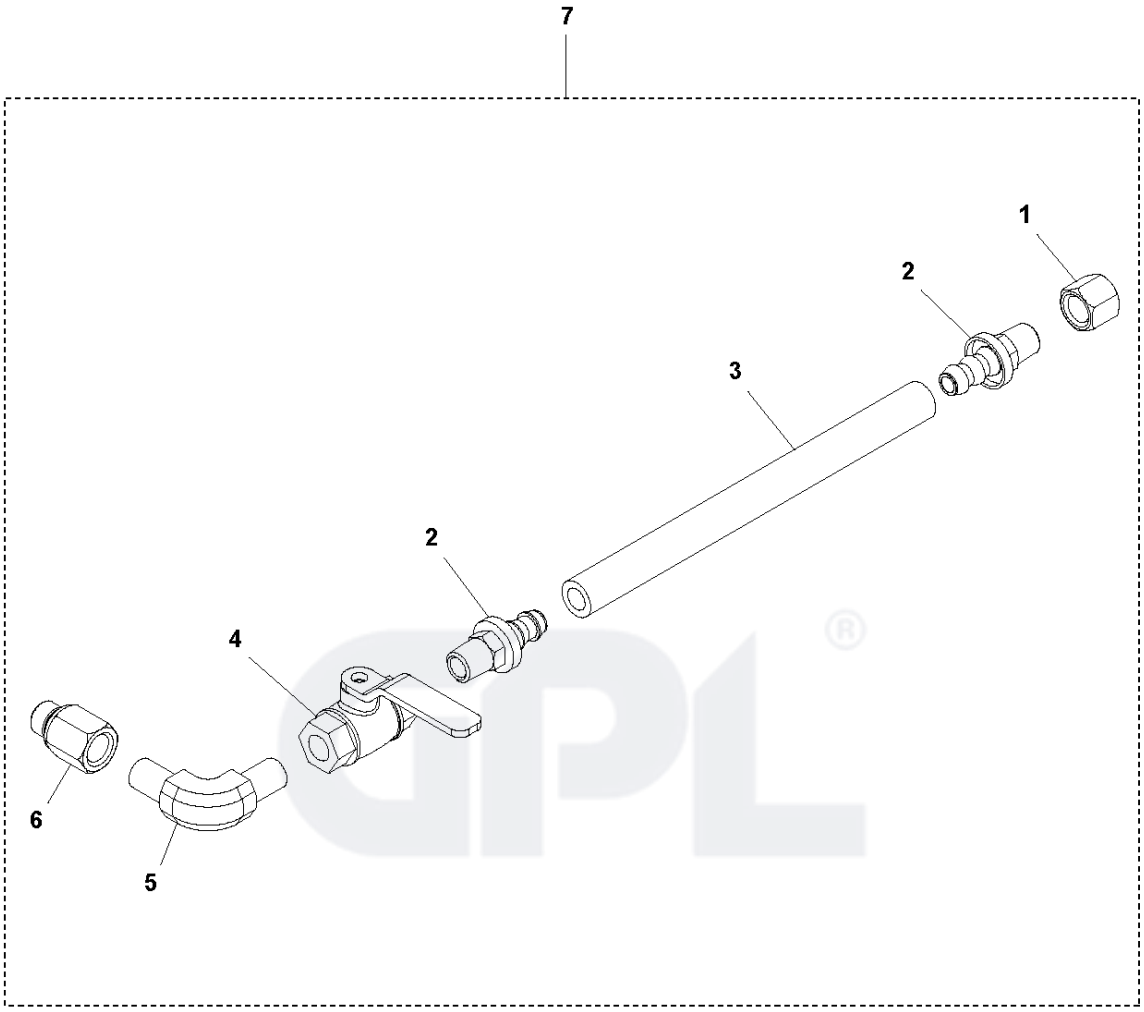

Ref	Part No	Description	Remark	QTY	KIT
1	505 77 66-01	CAP		1	7
2	505 73 86-01	FITTING		2	7
3	505 73 85-01	HOSE		1	7
4	505 73 89-01	VALVE		1	7
5	505 73 87-01	ADAPTER		1	7
6	505 73 88-01	ADAPTER		1	7
7	505 85 75-05	KIT		1	

GPL®

D **SOFF CUT X2500**
BLADE IDLER PULLEY

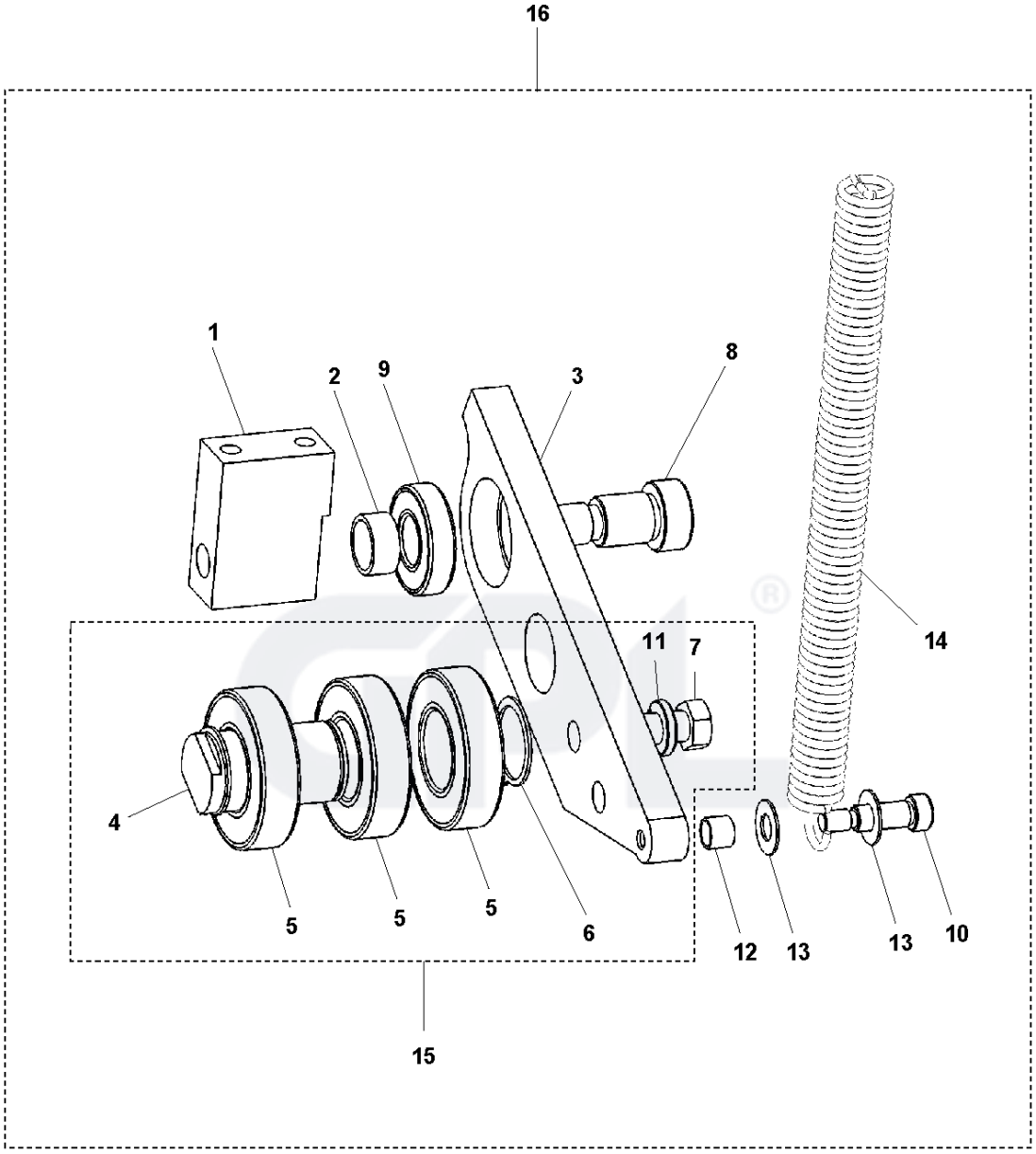

Ref	Part No	Description	Remark	QTY KIT
1	505 71 48-01	BLOCK		1
2	505 71 46-02	SPACER		1
3	505 70 69-01	ARM		1
4	505 70 68-01	SHAFT		1
5	505 73 63-01	BALL BEARING		3
6	542 20 62-05	SNAP RING		2
7	539 97 69-41	SCREW		1
8	505 72 62-01	BOLT		1
9	505 73 60-01	BALL BEARING		1
10	505 72 64-01	BOLT		1
11	505 73 10-01	WASHER		1
12	505 71 79-01	BUSHING		1
13	505 72 52-01	WASHER		2
14	505 73 73-01	SPRING		1
15	505 48 34-01	BEARING KIT		1
16	510 27 17-05	PULLEY ASSY		1

GPL®

E **SOFF CUT X2500**
PUMP IDLER PULLEY

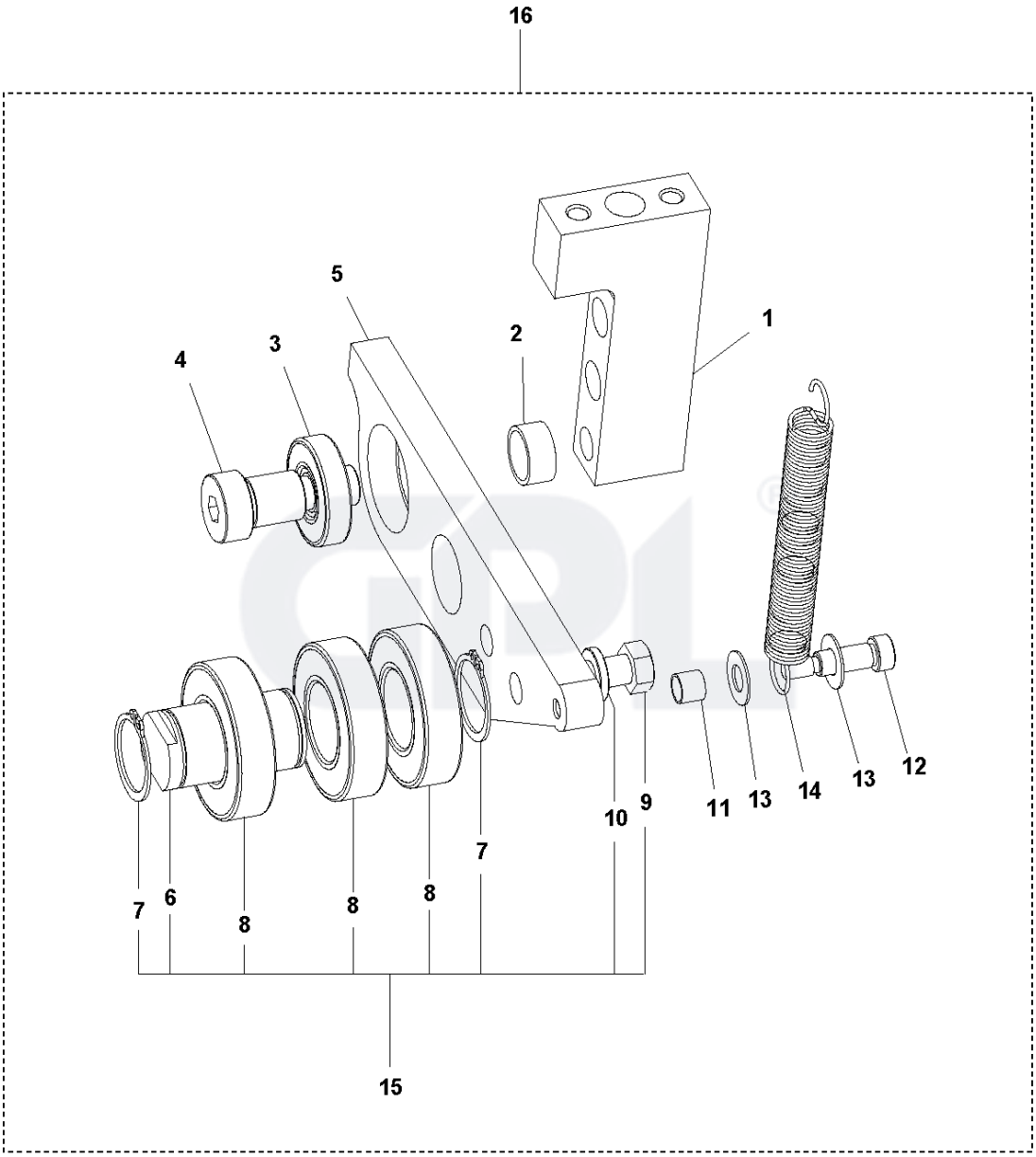

Ref	Part No	Description	Remark	QTY	KIT
1	505 71 44-01	BLOCK		1	16
2	505 71 46-02	SPACER		1	16
3	505 73 60-01	BALL BEARING		1	16
4	505 72 62-01	BOLT		1	16
5	505 70 69-01	ARM		1	16
6	505 70 68-01	SHAFT		1	15,16
7	542 20 62-05	SNAP RING		2	15,16
8	505 73 63-01	BALL BEARING		3	15,16
9	539 97 69-41	SCREW		1	15,16
10	505 73 10-01	WASHER		1	15,16
11	505 71 79-01	BUSHING		1	16
12	505 72 64-01	BOLT		1	16
13	505 72 52-01	WASHER		2	16
14	505 73 79-01	SPRING		1	16
15	505 48 34-01	BEARING KIT		1	16
16	505 85 74-01	PULLEY KIT		1	

GPL®

F **SOFF CUT X2500**
BLADE SHAFT ASSEMBLY

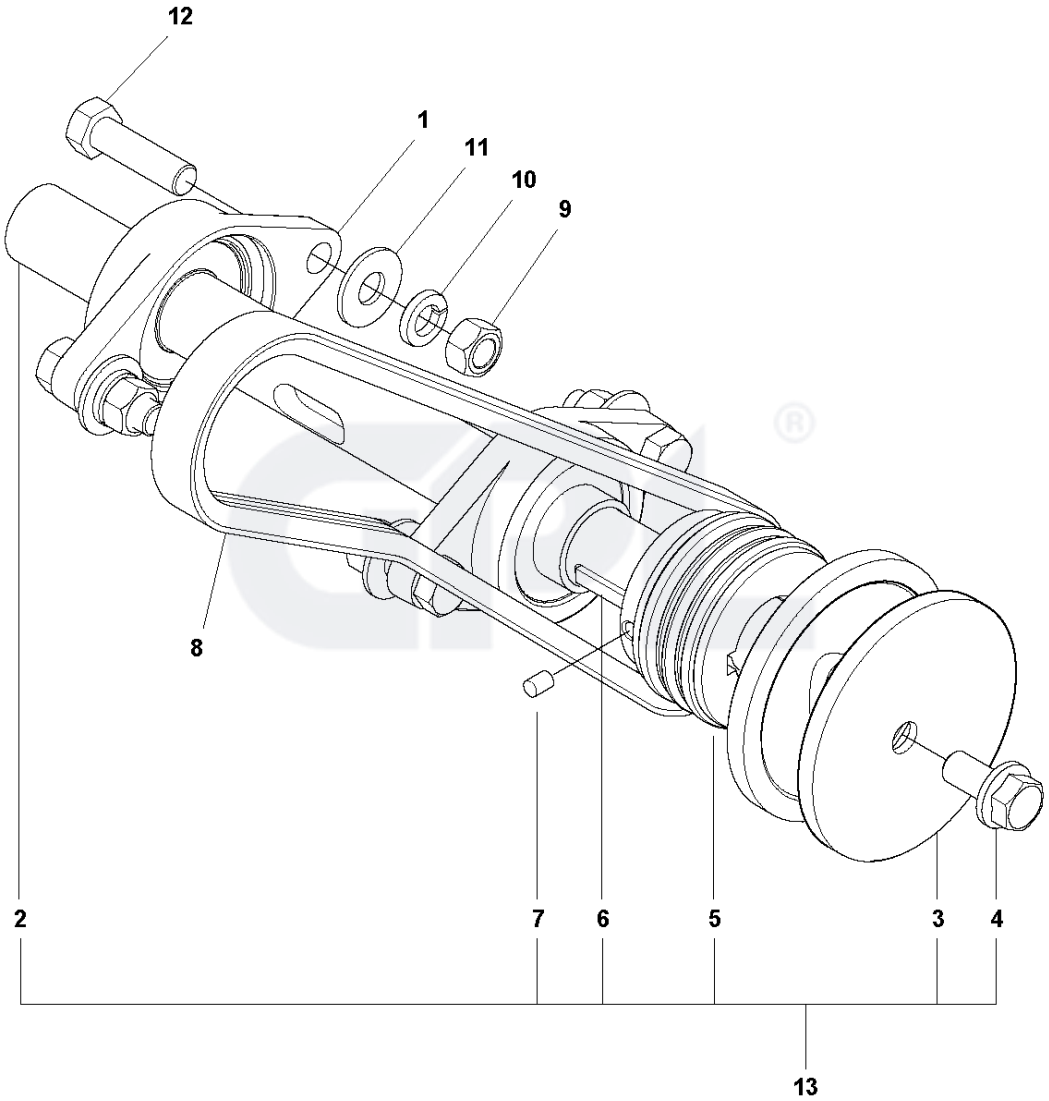

Ref	Part No	Description	Remark	QTY	KIT
1	505 73 65-01	BEARING		2	
2	505 57 32-03	SHAFT		1	13
3	505 49 15-04	WASHER		1	13
4	505 48 37-01	BOLT		1	13
5	582 04 68-01	PULLEY		1	13
6	541 20 34-04	KEY		1	13
7	542 02 05-50	SCREW		4	13
8	505 74 04-01	BELT		1	
9	541 20 48-36	NUT		4	
10	505 73 11-01	WASHER		4	
11	505 73 14-01	WASHER		4	
12	505 72 70-01	BOLT		4	
13	505 88 07-01	BLADE SHAFT		1	

GPL®

G SOFF CUT X2500
FRONT WHEEL CARRIAGE

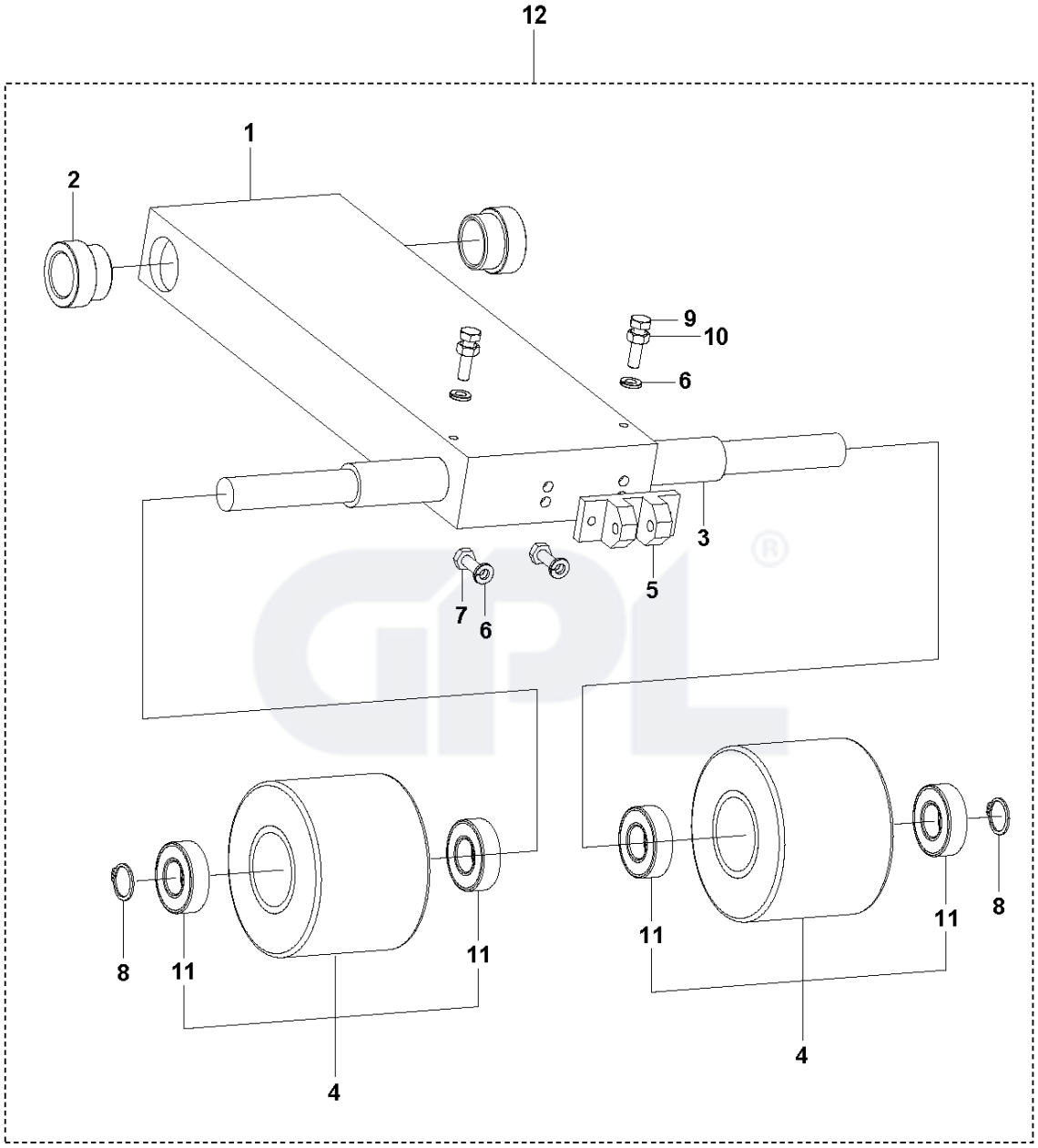

Ref	Part No	Description	Remark	QTY	KIT
1	505 60 72-01	CARRIAGE		1	12
2	505 65 51-01	BUSHING		2	12
3	505 71 39-01	AXLE		1	12
4	505 86 62-01	WHEEL		2	12
5	505 70 62-01	ACTUATOR		1	12
6	505 63 28-01	WASHER		4	12
7	505 62 74-01	BOLT		2	12
8	505 73 35-01	SNAP RING		2	12
9	505 72 73-01	BOLT		2	12
10	505 63 19-01	NUT		2	12
11	505 73 61-01	BALL BEARING		4	12
12	510 27 14-05	WHEEL ASSY		1	

GPL®

H **SOFF CUT 2500**
PUMP ASSEMBLY

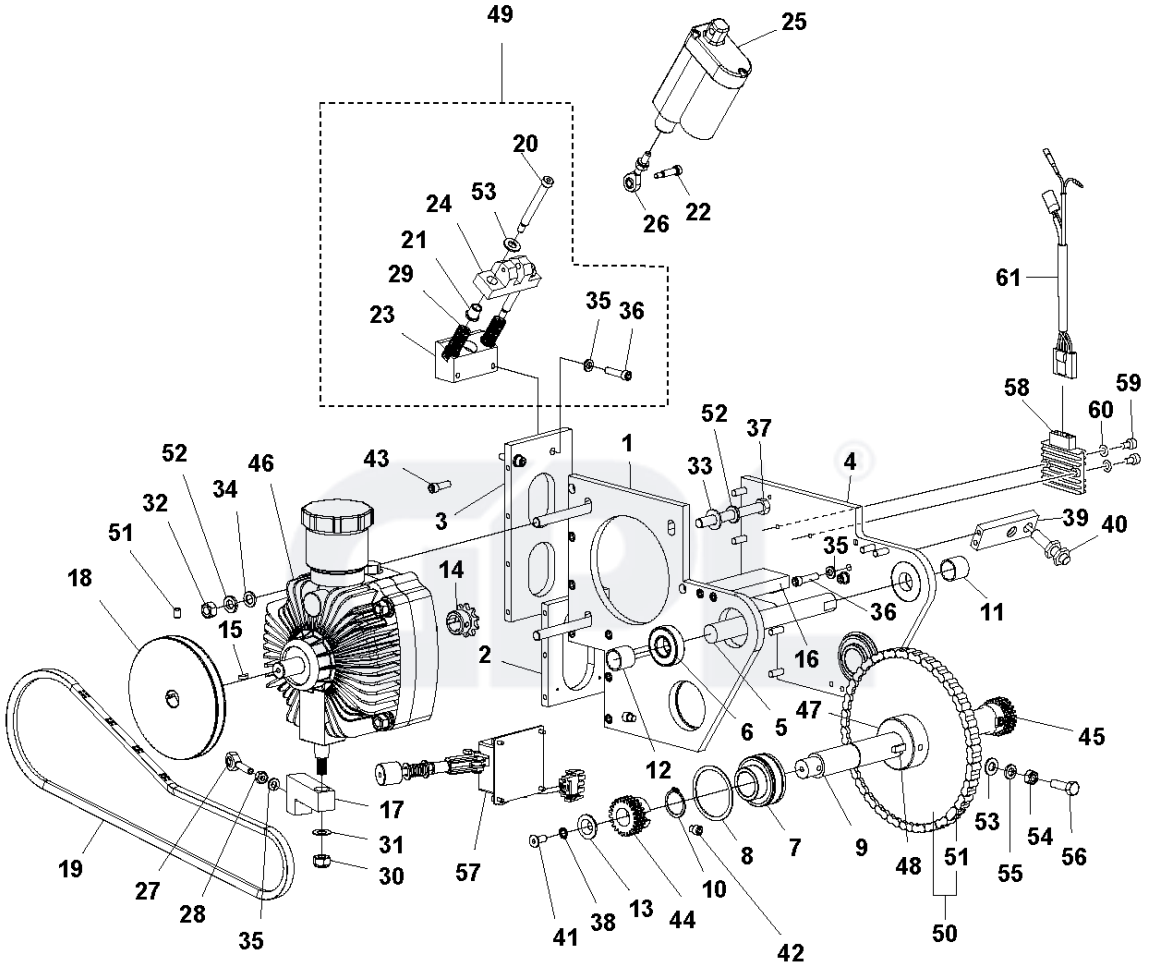

Ref	Part No	Description	Remark	QTY	KIT
1	505 70 59-01	PLATE		1	
2	505 70 61-01	PLATE		1	
3	505 70 60-01	SUPPORT		1	
4	505 60 76-01	PUMP SUPPORT PLATE LEFT		1	
5	505 60 55-01	SHAFT		1	
6	505 73 61-01	BALL BEARING		2	
7	505 68 94-01	BEARING		2	
8	505 69 02-01	SNAP RING		4	
9	505 60 53-01	DRIVE SHAFT		1	
10	542 20 62-05	SNAP RING		2	
11	505 60 57-01	SPACER		1	
12	505 71 61-01	BUSHING	".750""ID X .780""L alum"	1	
13	505 76 48-01	WASHER		2	
14	587 65 99-02	SPROCKET	12T #35 heat treated	1	
15	539 30 07-49	KEY		1	
16	505 75 68-01	PUMP BRACE TOP	Pump top brace	1	
17	505 71 49-01	ARM		1	
18	587 93 54-01	PULLEY	1G3V5.00 - .669	1	
19	505 48 40-04	BELT		1	
20	505 81 19-01	GUIDE		2	49
21	505 60 22-01	BEARING		2	49
22	505 72 58-01	BOLT		1	
23	505 71 87-01	BLOCK		1	49
24	580 88 28-01	BRACKET		1	49
25	505 84 46-01	ACTUATOR		1	
26	505 74 34-01	ROD END		1	
27	505 74 34-01	ROD END		1	
28	505 73 29-01	NUT		2	
29	505 60 29-01	SPRING		2	49
30	539 97 69-79	NUT		1	
31	505 63 42-01	WASHER		1	
32	539 99 01-30	NUT		4	
33	539 99 01-22	WASHER		4	
34	505 72 40-01	WASHER		4	
35	505 63 28-01	WASHER		6	49
36	505 72 73-01	BOLT	HHB, 1/4-20 X 1 S.S.	4	49
37	539 30 08-70	NLA HCS 3/8-16 X 3-1/2 GR 5 ZN	HHCS, .375-16 x 3.5 GR 5 Z/P	4	
38	505 73 18-01	WASHER		2	
39	505 60 75-01	BRACKET		1	
40	505 75 41-01	SWITCH		1	
41	505 62 86-01	SCREW	FHS 1/4-20 X 3/4 S.S.	2	
42	505 77 27-01	SCREW		4	
43	505 62 78-01	BOLT		17	
44	505 77 71-01	GEAR WHEEL		1	
45	505 60 24-01	GEAR		1	
46	531 07 57-01	HYDRAULIC PUMP	Hydrostatic pump	1	
47	505 73 94-01	SPROCKET		1	
48	541 20 34-04	KEY	1/4 x 1/4 X 1	1	
49	505 88 29-01	BLOCK		1	
50	505 86 72-01	CHAIN		1	
51	542 02 05-68	SCREW	SHSS, .25-20 x .375 HK.	2	
52	505 73 10-01	WASHER		8	
53	539 99 01-88	WASHER		3	49
54	539 99 01-30	NUT		1	
55	505 63 30-01	WASHER		1	
56	539 99 02-09	SCREW		1	
57	505 84 51-01	SPEED CONTROL SYSTEM		1	
58	536 46 15-01	ELECTRIC MODULE	SN 001393041002	1	
59	505 62 79-01	BOLT		2	
60	505 63 28-01	WASHER		2	
61	536 04 88-01	WIRE	SN 001393041002	1	

J **SOFF CUT X2500**
SPEED CONTROL ACTUATOR

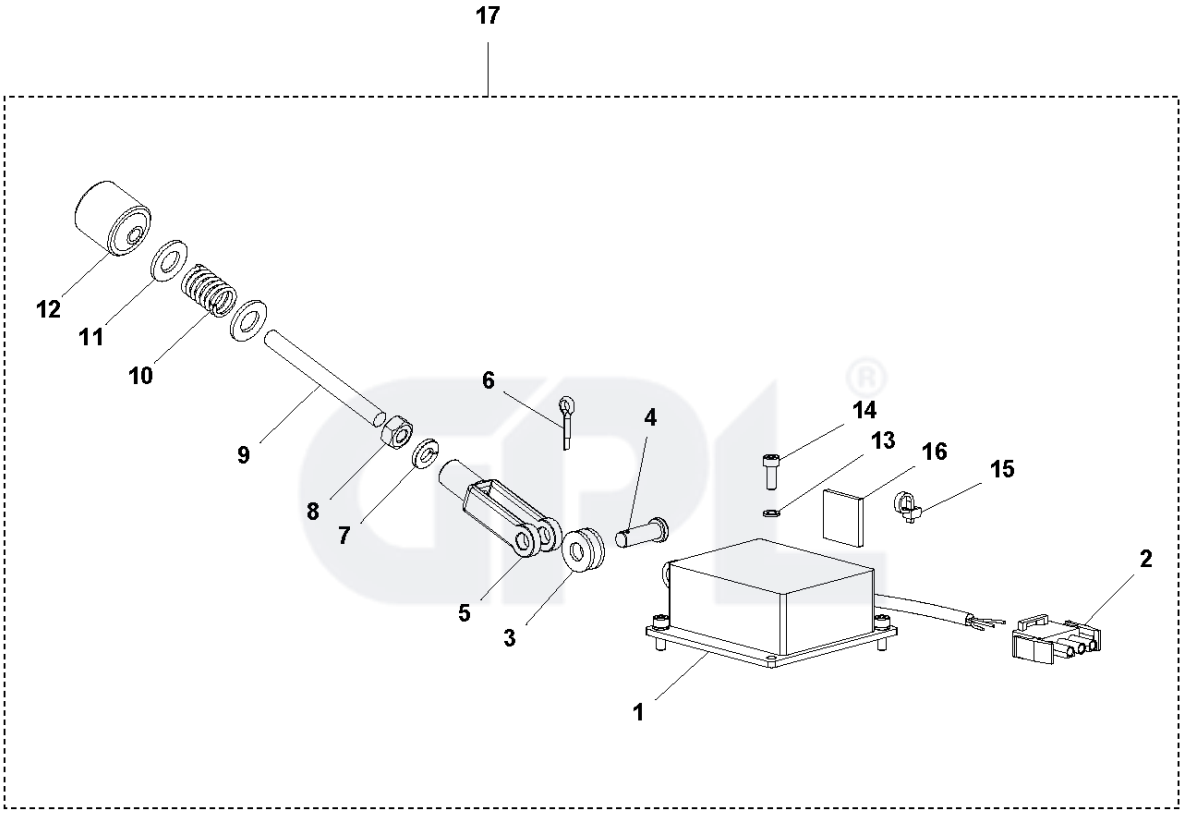

Ref	Part No	Description	Remark	QTY	KIT
1	505 74 98-01	SPEED CONTROL SYSTEM		1	17
2	505 75 16-01	PLUG		1	17
3	505 63 20-01	WASHER		2	17
4	505 74 35-01	CLEVIS		1	17
5	505 74 33-01	YOKE		1	17
6	505 73 97-01	PIN		1	17
7	505 63 28-01	WASHER		1	17
8	505 73 29-01	NUT		1	17
9	505 77 08-01	STUD		1	17
10	505 77 51-01	SPRING		1	17
11	539 99 00-55	WASHER		2	17
12	505 75 52-01	ADJUSTER		1	17
13	505 63 24-01	WASHER		4	17
14	505 62 76-01	BOLT		4	17
15	510 33 17-01	TIE WRAP		1	17
16	510 33 16-02	TIE WRAP		1	17
17	505 84 51-01	SPEED CONTROL SYSTEM		1	

GPL®

K SOFF CUT X2500
CONTROL PANEL ASSEMBLY

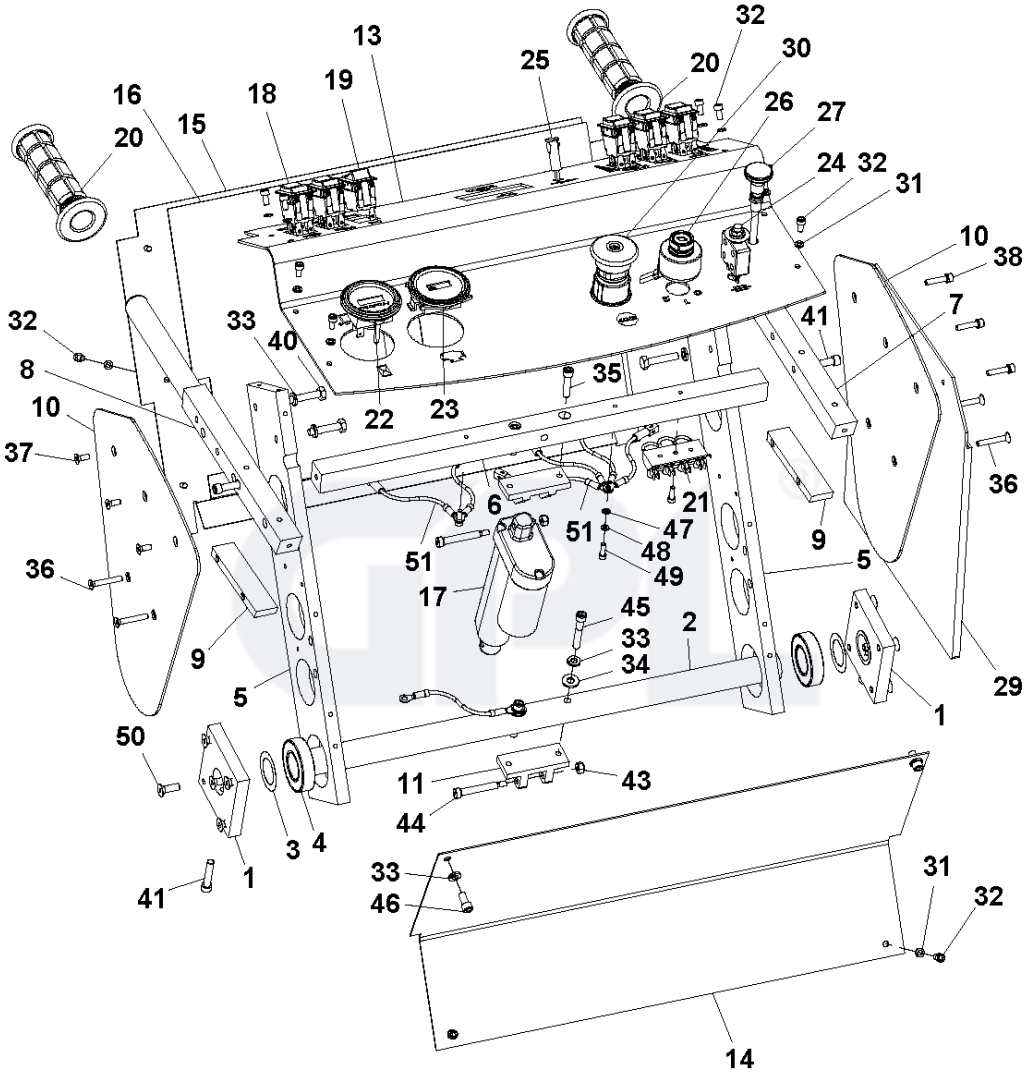

Ref	Part No	Description	Remark	QTY KIT
1	505 71 21-01	PLATE		2
2	505 71 20-01	SHAFT		1
3	505 73 69-01	SHIM		2
4	505 73 63-01	BALL BEARING		2
5	505 71 18-01	PLATE		2
6	505 70 84-01	CROSSBAR		1
7	505 70 88-01	HANDLEBAR		1
8	505 70 89-01	HANDLEBAR		1
9	505 60 71-01	SPACER BAR HANDLE		2
10	505 71 19-01	PLATE		2
11	505 70 66-01	BRACKET		2
13	505 60 89-01	CONTROL PANEL SYSTEM		1
14	505 60 64-01	PAN		1
15	505 70 71-01	PANEL		1
16	505 72 02-01	INSULATOR		1
17	505 84 49-01	ACTUATOR		1
18	590 53 25-01	SWITCH KIT	Kit	5
19	589 66 90-01	TOGGLE SWITCH		1
20	505 60 11-01	HANDLE GRIP		2
21	505 75 27-01	BLOCK		1
22	505 75 02-02	HOUR METER	Tach/hour meter	1
23	516 02 77-01	KIT		1
24	505 60 51-01	CIRCUIT BREAKER		1
25	505 75 28-01	LIGHT. LED (RED)	Led, red	2
26	576 38 90-03	WIRE ASSY		1
27	505 69 50-01	CABLE		1
29	505 72 15-01	BAG		1
30	505 70 44-01	STOP SWITCH		1
31	505 63 31-01	WASHER		19
32	505 62 77-01	BOLT		16
33	505 63 28-01	WASHER		8
34	505 63 20-01	WASHER		2
35	505 62 79-01	BOLT		2
36	505 72 98-01	SCREW		4
37	505 72 99-01	SCREW		3
38	505 72 97-01	BOLT	SHCS 10-32 X 5/8 S.S.	3
40	505 72 84-01	BOLT	HHB, 5/16-18 X 1 1/4 GR8 CAD.	4
41	505 62 80-01	BOLT		4
43	505 63 04-01	NUT		2
44	505 72 60-01	BOLT		2
45	505 62 80-01	BOLT	SHCS .25-20 X 1.25 S.S.	2
46	505 62 78-01	BOLT	SHCS .25-20 X .75 S.S.	2
47	505 73 17-01	LK WASH #8 EXT TOOTH		2
48	505 63 31-01	WASHER	#10 S.S.	2
49	505 72 96-01	BOLT	SHCS 10-32 X 1/2 S.S.	3
50	505 62 86-01	SCREW		10
51	575 44 66-02	GROUND CABLE		6

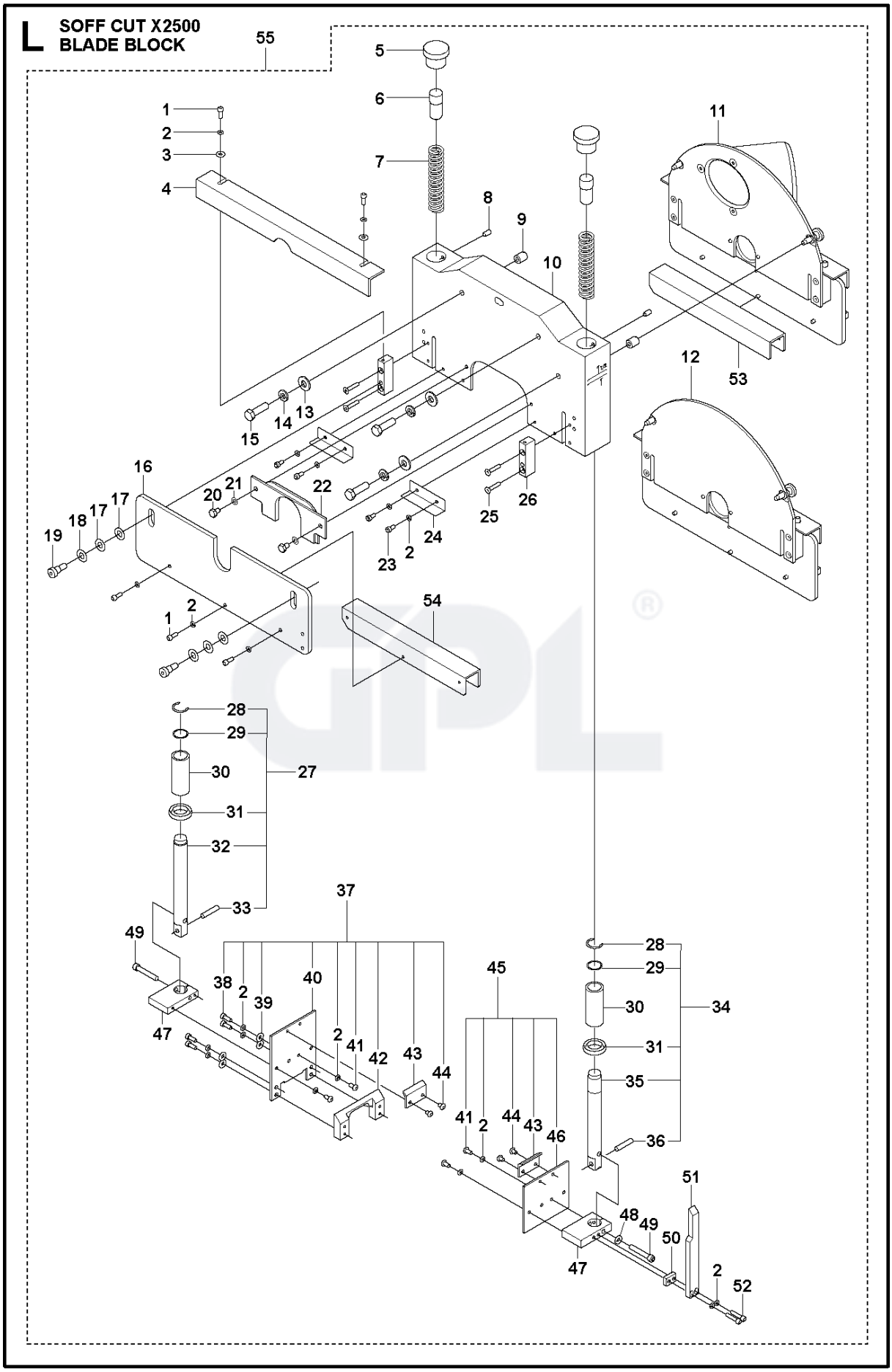
L
SOFF CUT X2500
BLADE BLOCK
55
5
6
7
1
2
3
4
8
9
10
11
12
53
13
14
15
16
17
18
19
20
21
22
23
24
25
26
54
28
29
30
31
32
33
27
37
38
39
40
41
42
43
44
45
46
47
49
34
35
36
48
50
51
52

Ref	Part No	Description	Remark	QTY	KIT
1	505 72 96-01	BOLT		6	55
2	505 63 31-01	WASHER		16	37, 45, 55
3	505 63 53-01	WASHER		8	55
4	505 71 06-01	ANGLE BRACKET		1	55
5	505 70 92-01	KNOB		2	55
6	505 70 95-01	ROD		2	55
7	505 73 72-01	SPRING		2	55
8	505 63 00-01	SCREW		2	55
9	505 74 83-01	INSERT		2	55
10	505 70 90-01	BLADE BLOCK		1	55
11	505 49 40-04	COVER		1	55
12	505 85 76-01	BLADE		1	55
13	539 99 01-22	WASHER		3	55
14	505 73 10-01	WASHER		3	55
15	539 97 69-41	SCREW		3	55
16	505 61 07-01	COVER		1	11, 55
17	505 63 45-01	WASHER		4	11, 55
18	505 63 42-01	WASHER		2	11, 55
19	505 72 61-01	BOLT		2	11, 55
20	505 62 73-01	BOLT		2	55
21	505 73 18-01	WASHER		2	55
22	505 71 82-01	INSERT		1	55
23	505 62 77-01	BOLT		4	55
24	505 71 17-01	BRACKET		2	55
25	505 73 00-01	SCREW		4	55
26	505 71 02-01	BLOCK		2	55
27	505 87 91-01	SHAFT		1	55
28	505 73 36-01	SNAP RING		2	27, 34, 55
29	541 40 14-72	RING		2	27, 34, 55
30	505 66 76-01	BUSHING		2	55
31	505 73 80-01	SEAL		2	27, 34, 55
32	505 70 94-01	ROD		1	27, 55
33	505 77 40-01	PIN		1	27, 55
34	505 87 90-01	SHAFT		1	55
35	505 70 93-01	ROD		1	34, 55
36	587 91 82-01	PIN		1	34, 55
37	505 87 95-01	PLATE		1	55
38	505 72 96-01	BOLT		6	37, 55
39	505 63 53-01	WASHER		8	37, 55
40	505 70 98-01	PLATE		1	37, 55
41	505 62 91-01	SCREW		4	37, 45, 55
42	505 71 03-01	BLOCK		1	37, 55
43	505 71 04-01	STEEL		2	37, 45, 55
44	505 62 95-01	SCREW		4	37, 45, 55
45	505 87 94-01	ADAPTER		1	55
46	505 70 97-01	PLATE		1	45, 55
47	505 76 02-01	REAR AXLE		1	55
48	505 63 28-01	WASHER		1	55
49	505 72 87-01	BOLT		2	55
50	505 76 07-01	SPACER		1	55
51	505 60 14-01	ARM		1	55
52	505 77 28-01	BOLT		2	55
53	505 61 06-01	CHANNEL	Channel, outer X2500	1	11, 55
54	505 61 08-01	CHANNEL	Channel, inner X2500	1	11, 55
55	593731301	TBD		1	

M SOFF CUT X2500
BLADE BLOCK COVER - VAC PORT

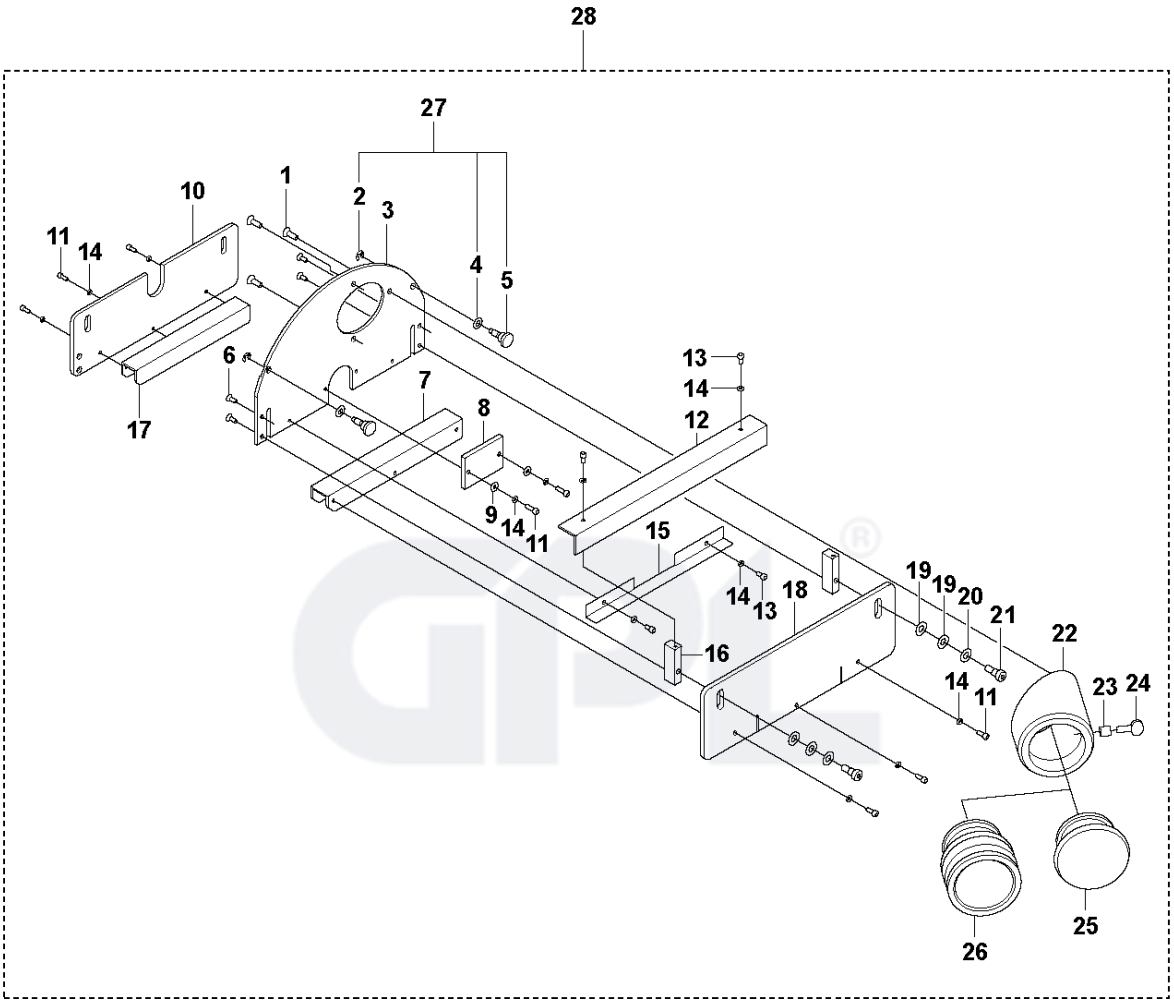

Ref	Part No	Description	Remark	QTY	KIT
1	505 73 05-01	SCREW		3	28
2	505 53 65-01	E-CLIP		2	27, 28
3	505 60 93-01	COVER	Cover, B.B. w/ dust port	1	28
4	505 53 64-01	WASHER		2	27, 28
5	505 53 63-01	KNOB		2	27, 28
6	505 72 99-01	SCREW		4	28
7	505 61 06-01	CHANNEL	Channel, outer X2500	1	28
8	505 72 11-01	PLATE		1	28
9	505 63 53-01	WASHER		2	28
10	505 61 07-01	COVER	Cover, inner lexan, X2500	1	28
11	505 72 96-01	BOLT		8	28
12	505 71 05-01	ANGLE BRACKET		1	28
13	505 62 77-01	BOLT		6	28
14	505 63 31-01	WASHER		12	28
15	505 71 16-01	BRACKET		1	28
16	505 71 01-01	BLOCK		2	28
17	505 61 08-01	CHANNEL	Channel, inner X2500	1	28
18	505 61 05-01	COVER	Cover, outer lexan vacuum, X2500	1	28
19	505 63 45-01	WASHER		4	28
20	505 63 42-01	WASHER		2	28
21	505 72 61-01	BOLT		2	28
22	591 35 71-01	TUBE		1	28
23	505 74 83-01	INSERT		1	28
24	505 79 61-01	SCREW		1	28
25	593 21 44-01	PLUG		1	28
26	502 56 96-03	COUPLING	Coupling, 300-E, Male machined	1	28
27	505 48 29-01	KNOB		1	28
28	505 49 40-04	COVER		1	

N **SOFF CUT X2500**
BLADE BLOCK COVER - NON VAC PORT

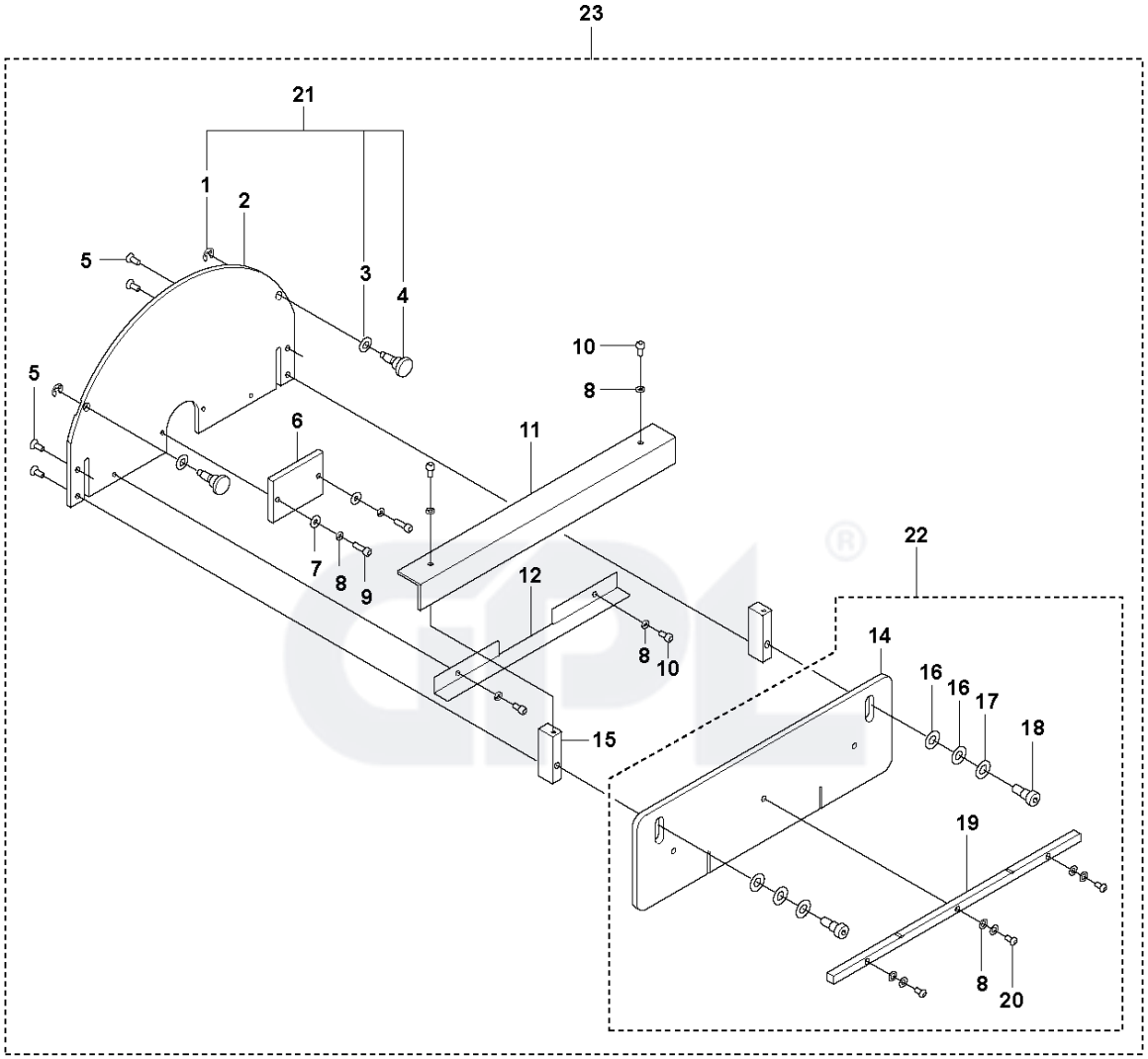

Ref	Part No	Description	Remark	QTY	KIT
1	505 53 65-01	E-CLIP	"1/4"" Dia"	2	21, 23
2	505 70 91-01	COVER		1	23
3	505 53 64-01	WASHER	Believeile	2	21, 23
4	505 53 63-01	KNOB		2	21, 23
5	505 72 99-01	SCREW		4	23
6	505 72 11-01	PLATE		1	23
7	505 63 53-01	WASHER	Flat, # 10	2	23
8	505 63 31-01	WASHER	Split, # 10	9	22, 23
9	505 72 96-01	BOLT	10-32 x 5/8	2	23
10	505 62 77-01	BOLT	SHCS 10-32 x 3/8	4	23
11	505 71 05-01	ANGLE BRACKET	Angle bracket	1	23
12	505 71 16-01	BRACKET	Angle diverter, BB	1	23
14	505 70 99-01	PLATE	Lexan cover	1	22, 23
15	505 71 01-01	BLOCK	Diverter, Mt	2	23
16	505 63 45-01	WASHER	3/6 delrin	4	22, 23
17	505 63 42-01	WASHER	3/8 steel	2	22, 23
18	505 72 61-01	BOLT	SHSB 3/8 x 3/8	2	22, 23
19	505 70 88-01	HANDLEBAR	Stiffener	1	22, 23
20	505 62 93-01	SCREW	Screw	1	22, 23
21	505 48 29-01	KNOB	Kit	1	23
22	505 87 96-01	PLATE	Kit	1	23
23	505 85 76-01	BLADE	Kit	1	

P **SOFF CUT X2500**
GUIDE ARM ASSEMBLY

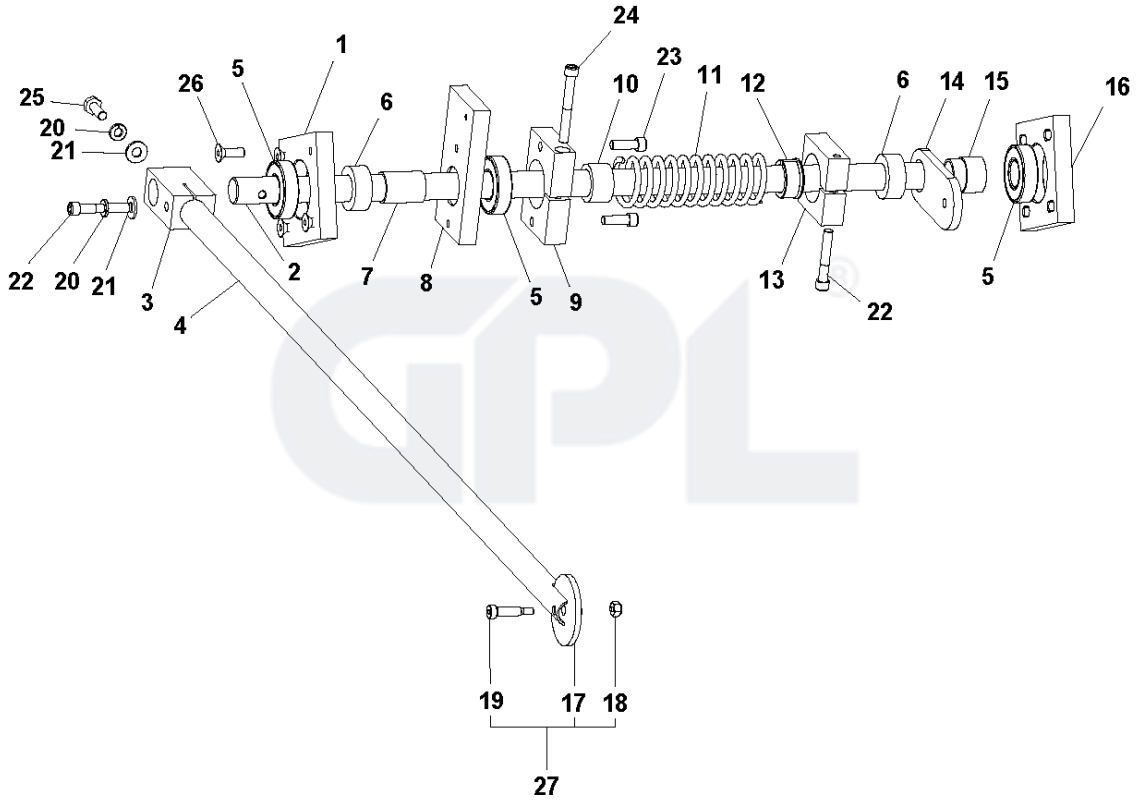

Ref	Part No	Description	Remark	QTY	KIT
1	505 71 37-01	PLATE		1	
2	505 71 36-01	SHAFT		1	
3	505 70 70-01	BLOCK		1	
4	505 71 35-01	GUIDE		1	
5	505 73 61-01	BALL BEARING		3	
6	505 71 84-01	SHAFT		2	
7	505 71 62-01	BUSHING		1	
8	505 71 71-01	BLOCK		1	
9	505 71 72-01	BLOCK		1	
10	505 71 75-01	BUSHING		1	
11	505 73 75-01	SPRING		1	
12	505 71 74-01	BUSHING		1	
13	505 71 73-01	BLOCK		1	
14	505 71 91-01	PLATE		1	
15	505 71 93-01	BUSHING		1	
16	505 71 38-01	PLATE		1	
17	505 61 42-01	DISC		1	27
18	505 63 04-01	NUT		1	27
19	505 72 58-01	BOLT		1	27
20	505 63 28-01	WASHER		2	
21	505 63 20-01	WASHER		2	
22	505 72 88-01	BOLT		2	
23	505 62 78-01	BOLT		2	
24	505 72 89-01	BOLT		1	
25	505 62 75-01	BOLT		1	
26	505 62 86-01	SCREW		4	
27	505 87 77-01	WHEEL		1	

GPL®

Q SOFF CUT X2500
MAINFRAME ASSEMBLY

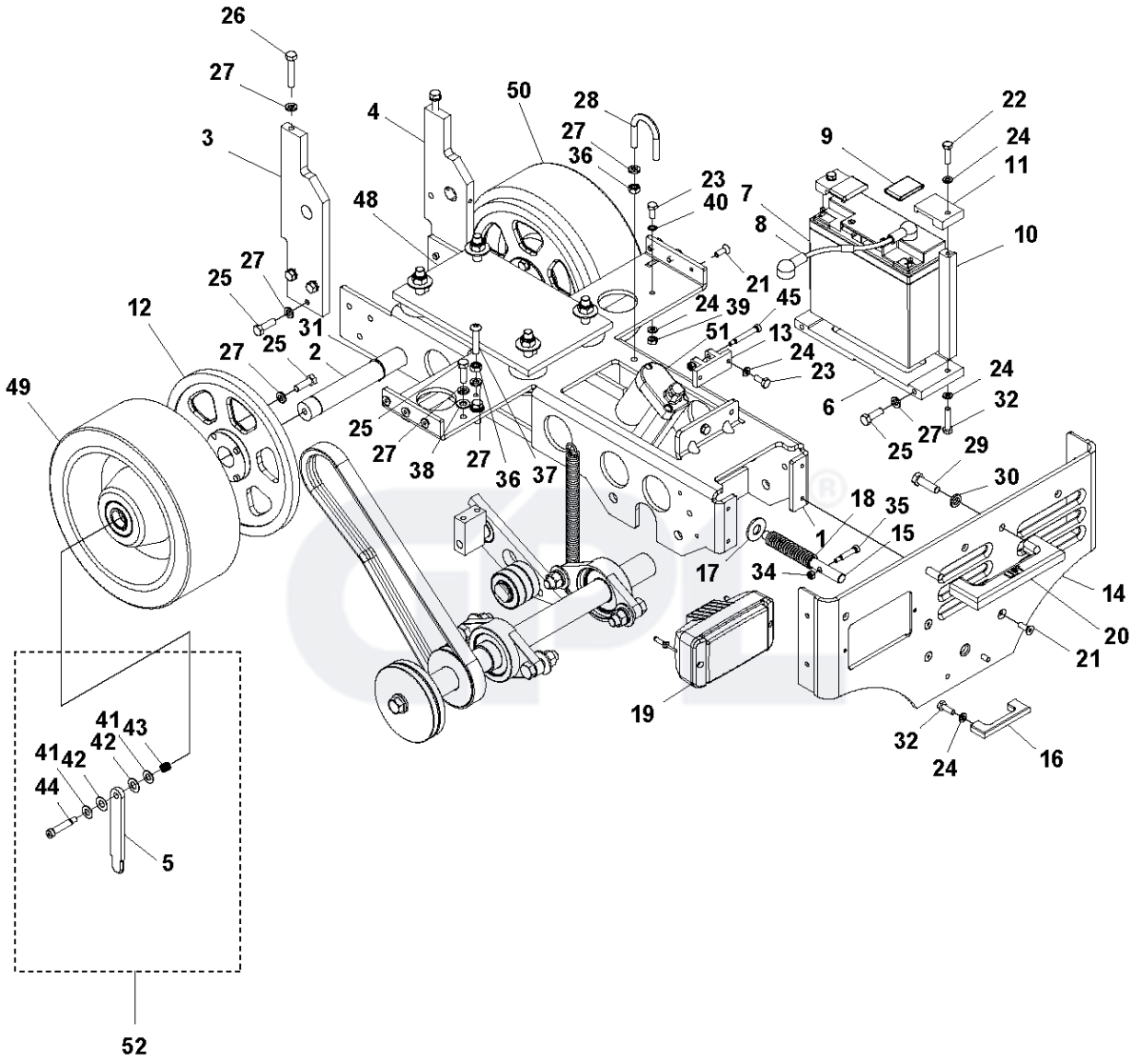

Ref	Part No	Description	Remark	QTY KIT
1	505 60 94-01	FRAME		1
2	505 60 54-01	AXLE		1
3	505 70 53-01	ARM		1
4	505 60 74-01	ARM		1
5	505 71 85-01	GUIDE		1
6	505 71 40-01	PLATE		1
7	505 74 99-01	BATTERY		1
8	575 47 78-01	WIRE ASSY		1
9	505 74 70-01	COVER		2
10	505 71 80-01	ARM		2
11	505 71 81-01	BLOCK		2
12	505 86 50-01	REAR AXLE		2
13	505 70 66-01	BRACKET		1
14	505 60 52-01	PLATE		1
15	505 71 41-01	SHAFT		1
16	505 71 42-01	SHAFT		1
17	505 73 14-01	WASHER		1
18	505 73 74-01	SPRING		1
19	505 48 50-01	HEADLAMP		1
20	505 71 69-01	HANDLE		1
21	505 62 86-01	SCREW		10
22	505 72 73-01	BOLT		2
23	505 62 74-01	BOLT		3
24	505 63 28-01	WASHER		9
25	539 99 02-09	SCREW		18
26	505 72 85-01	BOLT		2
27	505 63 30-01	WASHER		23
28	575 42 13-01	CLAMP		1
29	539 97 69-41	SCREW		2
30	505 73 10-01	WASHER		2
31	542 20 62-05	SNAP RING		3
32	505 72 73-01	BOLT	HHB, 1/4-20 X 1 S.S.	4
34	505 63 04-01	NUT		2
35	505 72 59-01	BOLT		1
36	505 73 24-01	NUT		3
37	505 72 28-01	BHS 5/16-18-1 1/2 S.S.		1
38	539 99 01-88	WASHER		2
39	505 63 19-01	NUT		1
40	505 73 18-01	WASHER		1
41	505 72 52-01	WASHER		2
42	505 63 45-01	WASHER		2
43	505 63 60-01	SPRING		1
44	505 72 66-01	BOLT		1
45	505 72 60-01	BOLT		1
48	505 85 78-01	PLATE KIT		1
49	505 86 53-01	WHEEL		1
50	505 86 54-01	WHEEL		1
51	505 84 47-01	ACTUATOR		1
52	505 85 79-01	ARM		1

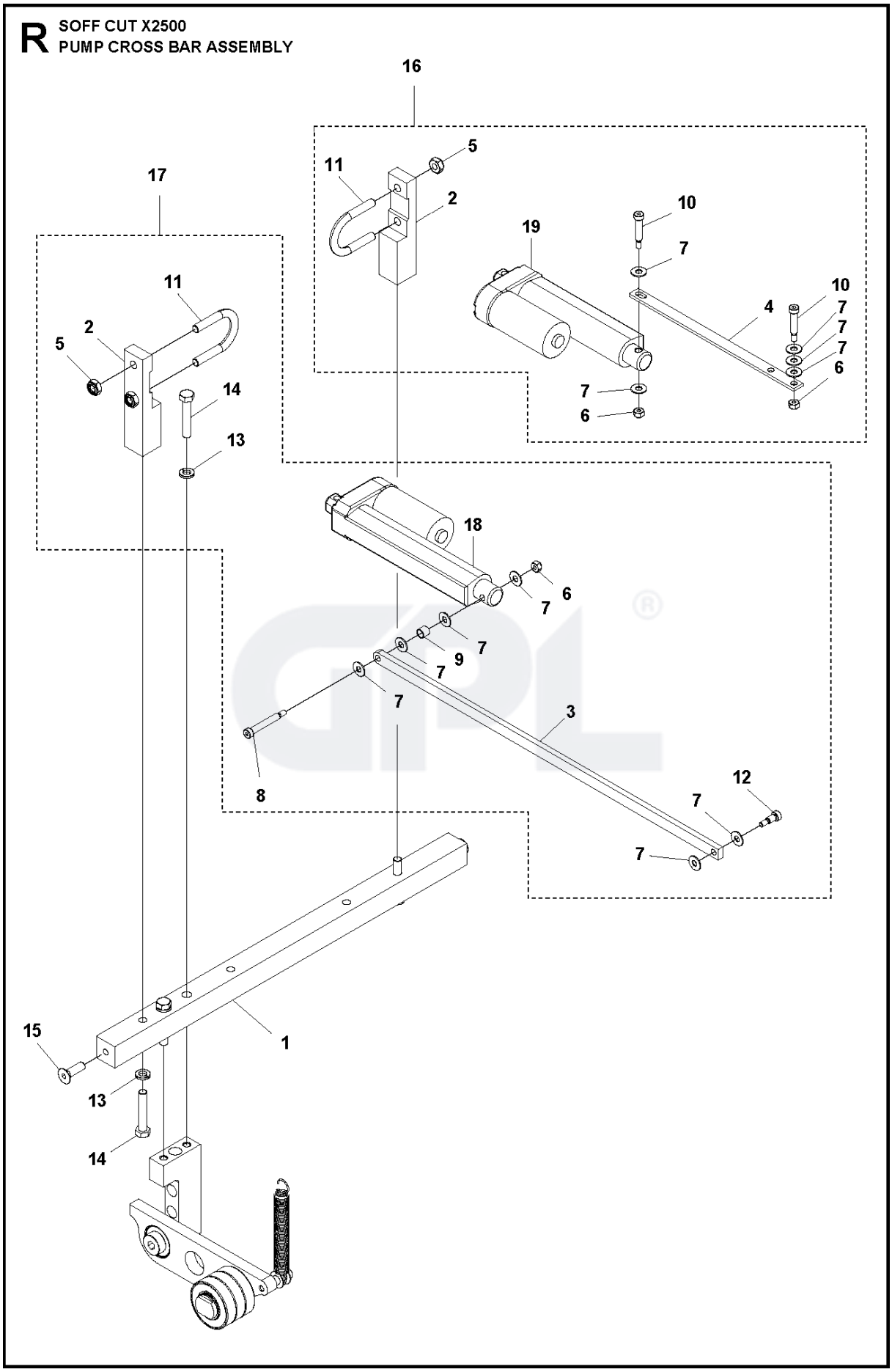
R
SOFF CUT X2500
PUMP CROSS BAR ASSEMBLY
16
5
11
2
17
10
19
7
11
10
4
7
2
7
5
7
6
14
7
6
13
18
6
7
7
9
7
7
3
8
12
7
7
15
1
13
14

Ref	Part No	Description	Remark	QTY	KIT
1	505 60 58-01	CROSSBAR		1	
2	505 61 10-01	BRACKET		2	16,17
3	505 61 11-01	ARM		1	17
4	505 71 58-01	ARM		1	16
5	505 63 17-01	NUT		4	16,17
6	505 63 04-01	NUT		3	16,17
7	505 63 44-01	WASHER		11	16, 17
8	505 72 60-01	BOLT		1	16,17
9	505 71 79-01	BUSHING		1	17
10	505 72 59-01	BOLT		2	16
11	575 42 13-01	CLAMP		2	16,17
12	505 68 64-01	BOLT		1	17
13	505 63 30-01	WASHER		4	17
14	505 72 85-01	BOLT		4	17
15	505 73 01-01	SCREW		2	
16	505 84 48-01	THROTTLE		1	
17	505 84 50-01	ACTUATOR		1	
18	579 21 51-01	ACTUATOR		1	17
19	505 74 96-01	ACTUATOR		1	16

S **SOFF CUT X2500**
REAR ACCESS ASSEMBLY

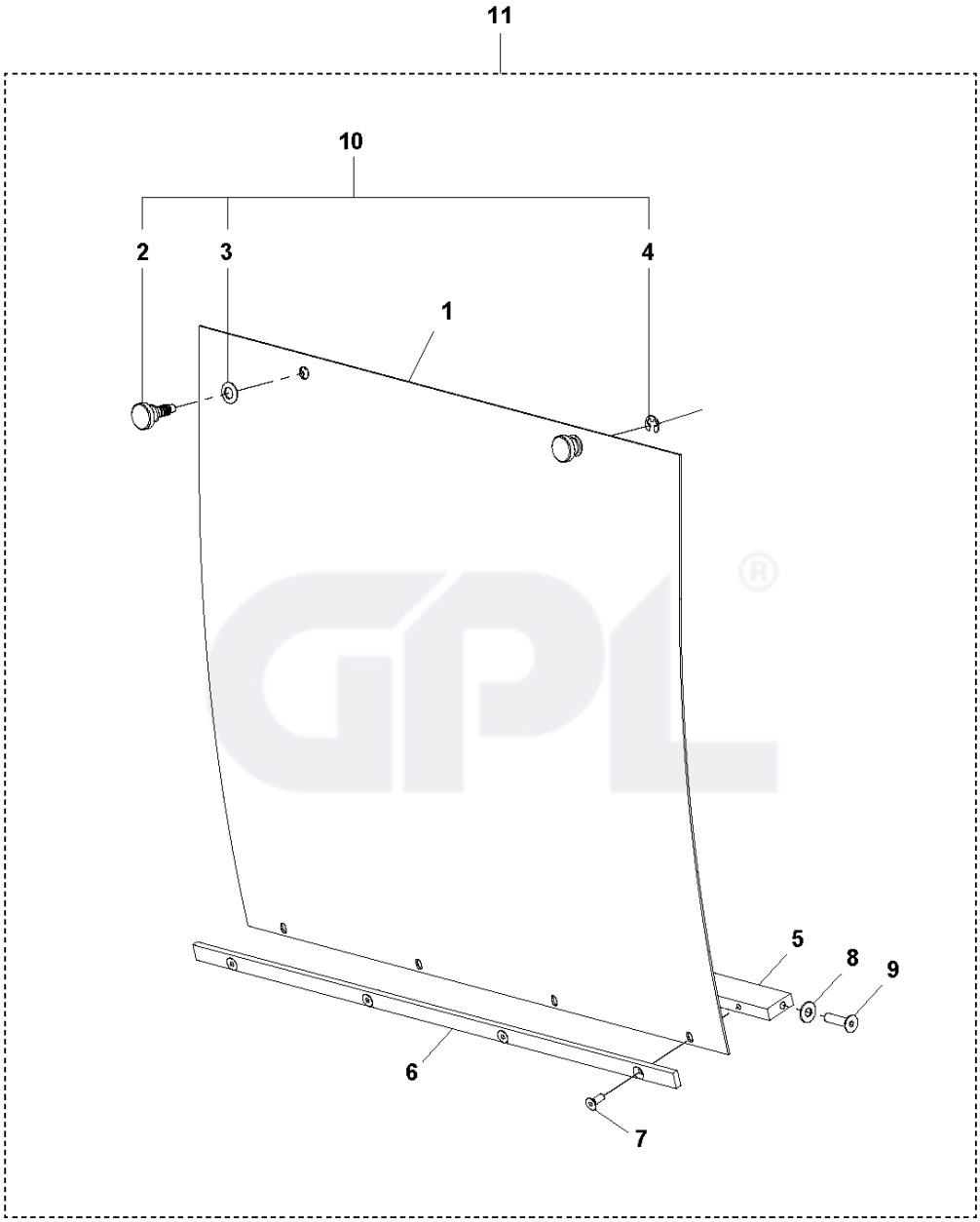

Ref	Part No	Description	Remark	QTY	KIT
1	505 60 96-01	PANEL		1	11
2	505 53 63-01	KNOB		2	11
3	505 53 64-01	WASHER		2	11
4	505 53 65-01	E-CLIP		2	11
5	505 71 70-01	CROSSBAR		1	11
6	505 71 94-01	BRACE		1	11
7	505 72 99-01	SCREW		4	11
8	505 63 44-01	WASHER		2	11
9	505 62 86-01	SCREW		2	11
10	505 48 29-01	KNOB		1	11
11	505 87 85-01	PANEL	Rear access panel kit	1	

GPL®

T **SOFF CUT X2500**
PANEL ASSEMBLY

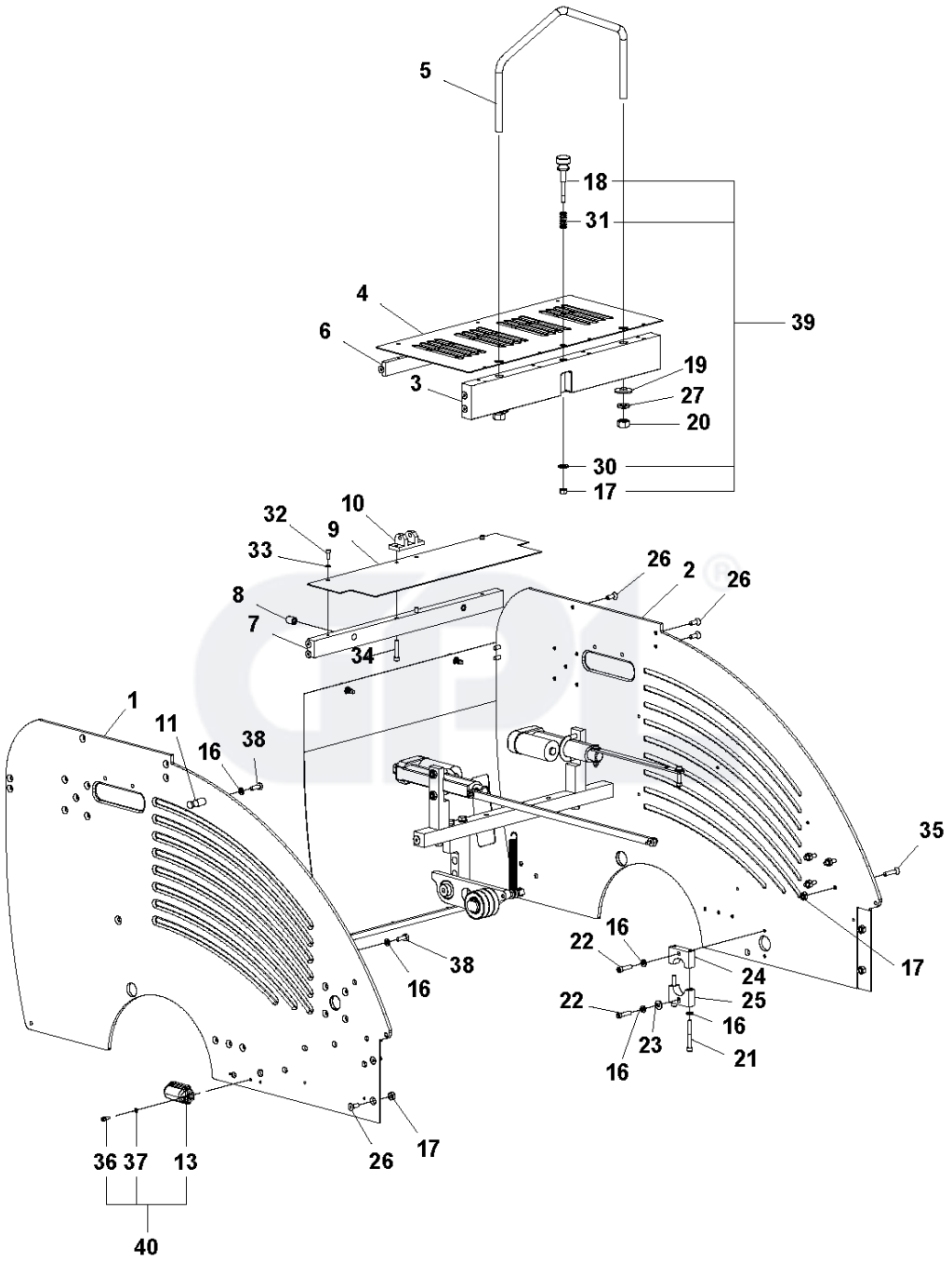

Ref	Part No	Description	Remark	QTY KIT
1	505 60 65-01	SIDE PLATE (RIGHT)		1
2	505 60 66-01	SIDE PLATE (LEFT)		1
3	505 60 69-01	CROSSBAR		1
4	505 60 68-01	PAN		1
5	505 60 70-01	BAR		1
6	505 70 86-01	CROSSBAR		1
7	505 70 85-01	CROSS BAR (REAR ACCESS PANEL)		1
8	505 74 83-01	INSERT		3
9	505 70 73-01	PANEL. COVER (HANDLE ACT. CROS		1
10	505 70 65-01	ACTUATOR		1
11	505 71 86-01	ROD		1
13	505 75 25-01	LIGHT		1
16	505 63 28-01	WASHER		6
17	539 97 69-78	NUT	Fiber .25-20 Z/P	9
18	505 76 72-01	KNOB		1
19	505 73 14-01	WASHER		2
20	505 83 36-01	NUT	1/2-13 S.S.	2
21	505 72 89-01	BOLT		2
22	505 62 79-01	BOLT		2
23	505 63 20-01	WASHER		1
24	505 71 67-01	BLOCK		1
25	505 71 68-01	BLOCK		1
26	505 62 86-01	SCREW		14
27	505 73 11-01	WASHER		2
30	539 99 00-55	WASHER		1
31	505 73 71-01	SPRING		9
32	505 62 77-01	BOLT	SHCS 10-32 X .375 S.S.	2
33	505 63 31-01	WASHER		2
34	505 62 80-01	BOLT		2
35	505 77 34-01	SOCKET		4
36	505 62 82-01	BOLT		2
37	505 63 27-01	WASHER		2
38	505 62 75-01	BOLT		2
39	505 88 66-01	KNOB		1
40	505 48 69-01	LAMP		1

U SOFF CUT X2500
HOOD ASSEMBLY

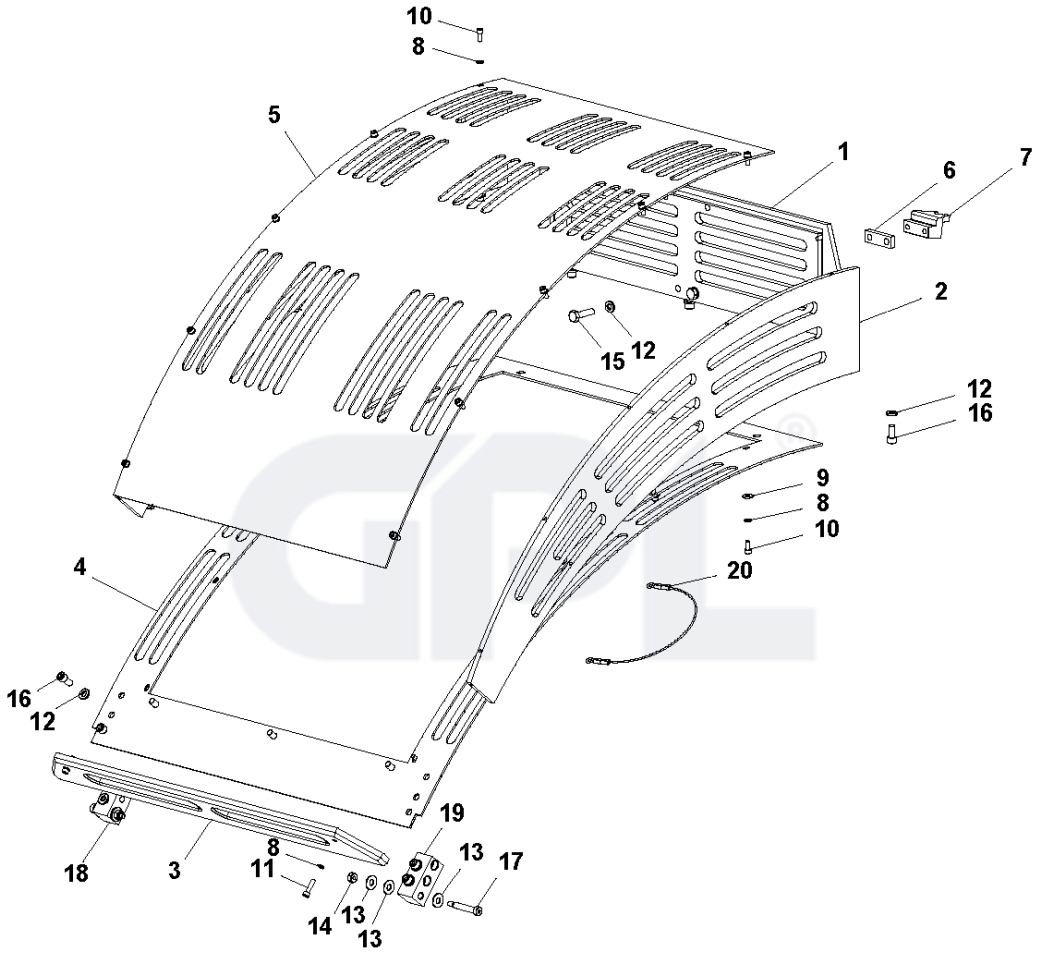

Ref	Part No	Description	Remark	QTY KIT
1	505 71 25-01	REAR PLATE HOOD		1
2	505 60 85-01	SIDE HOOD PANEL		2
3	505 71 24-01	PLATE		1
4	505 60 84-01	HOOD		1
5	505 60 83-01	HOOD		1
6	505 64 34-01	SPACER		1
7	505 71 95-01	BLOCK		1
8	505 63 27-01	WASHER		24
9	505 82 26-01	WASHER		10
10	505 62 81-01	BOLT		20
11	505 72 91-01	BOLT		4
12	505 63 27-01	WASHER		12
13	505 63 44-01	WASHER		6
14	505 63 04-01	NUT		2
15	505 72 73-01	BOLT		2
16	505 62 78-01	BOLT	SHCS .25-20 X .75 S.S.	10
17	505 81 17-01	BOLT		2
18	505 71 31-01	BLOCK		1
19	505 71 30-01	BLOCK		1
20	505 86 52-01	WIRE		1

GPL®