BV20E 20G

Spare parts list

Beams and screeds

BV20E 20G

© 2018 xxxxxxxxxxxxxxxx | No. xxxxxxxxxx| 2018-03

General information

This spare parts list applies to the following:

Part number	Description
-	-
-	-
-	-
-	-

Use only authorized parts. Any damage or malfunction caused by the use of unauthorized parts is not covered by Warranty or Product Liability.
Any unauthorized use or copying of the contents or any part thereof is prohibited. This applies in particular to trademarks, model denominations, part numbers, and drawings.

Instructions for use
This spare parts list contains no safety regulations and is merely intended to assist in the ordering of spare parts.
For information about operating, servicing, or repairing, the relevant Safety and operating instructions must be consulted at all costs.
Please observe the safety instructions listed in the relevant Safety and operating instructions!

Spare parts list

BV20E 1
Switchbox BV20E 3
Single phase vibrator 5
Tilting device BV20 7
BV20G 9
BV 20 H 12

Spare parts list BV20E

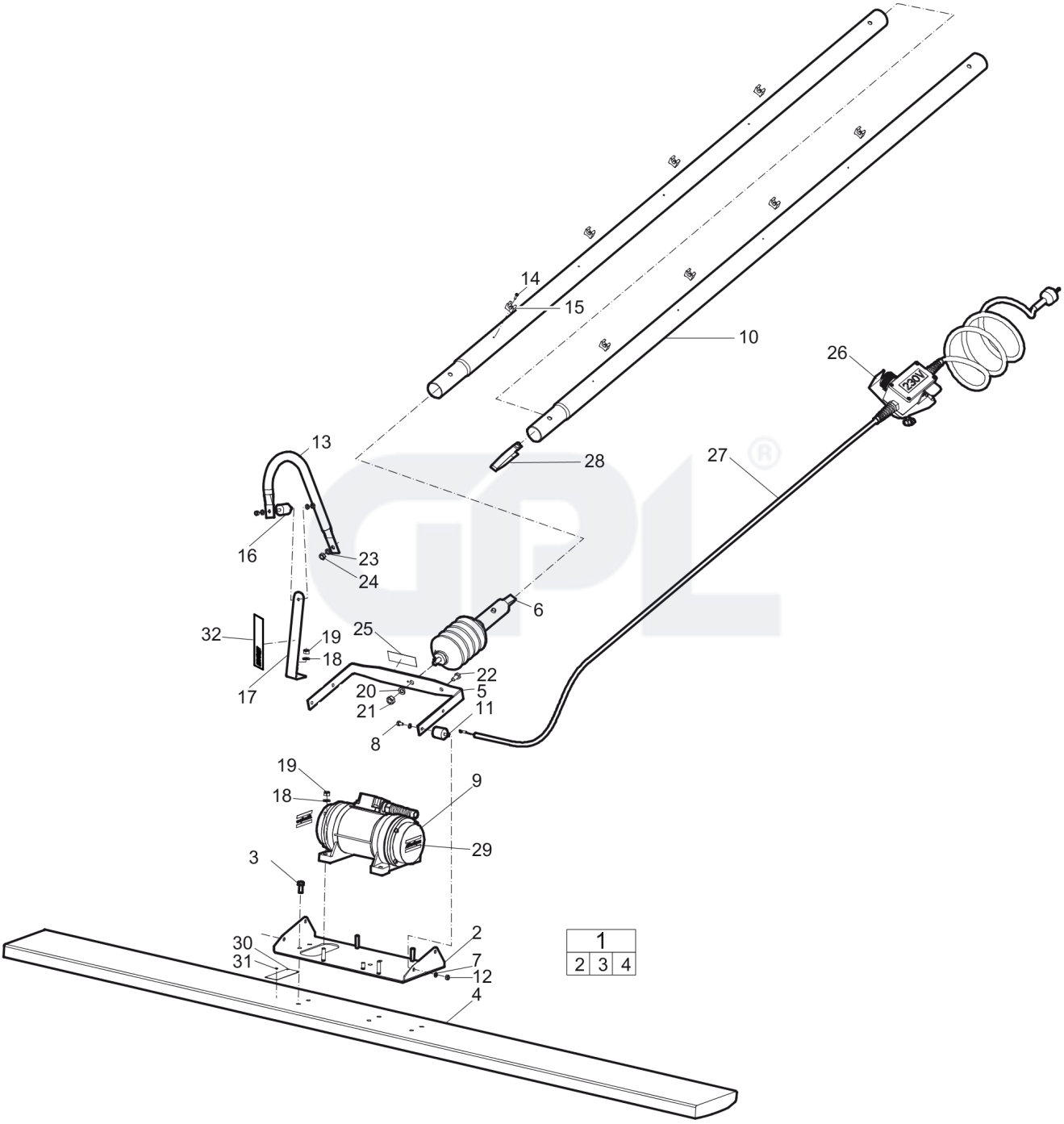

Item	Part No.	Name	Qty	L
1	595199901	Beam complete	1	
2	595499701	Motor holder	1	
3	594117901	Hex. head screw	1	
4	--	Profile	1	
5	594244901	Fork	1	
6	594237001	Tilting device	1	
7	595154501	Locking washer	10	
8	595344201	Bolt	4	
9	595524601	Vibrator	1	
10	595475901	Handle tube	2	
11	594225501	Shock absorber	4	
12	-	Nut, M6 DIN934	6	
13	595089401	Handle	1	
14	-	Screw, 4.85 x19 mm DIN7971	8	
15	595444101	Cable guide	8	
16	594227701	Shock absorber	1	
17	595499801	Bent plate	1	
18	-	Washer	5	
19	-	Lock nut, M8 DIN985	5	
20	595154401	Locking washer, Nord-Lock	1	
21	-	Nut, M10 DIN934	1	
22	-	Screw, H M8 x 16 mm DIN933	1	
23	-	Locking washer, Nord-Lock M8	1	
24	-	Nut, M8 DIN934	1	
25	-	Data plate (not available separately)	1	
26	594242201	Switchbox	1	
27	595153501	Cable	1	
28	594228001	Fastenning spring	1	
29	595212101	Instruction label	2	
30	-	Instruction label	1	
31	-	Screw M6 x 20 mm 8.8 A2K	4	
32	595501301	Decal model code	1	

Spare parts list Switchbox BV20E

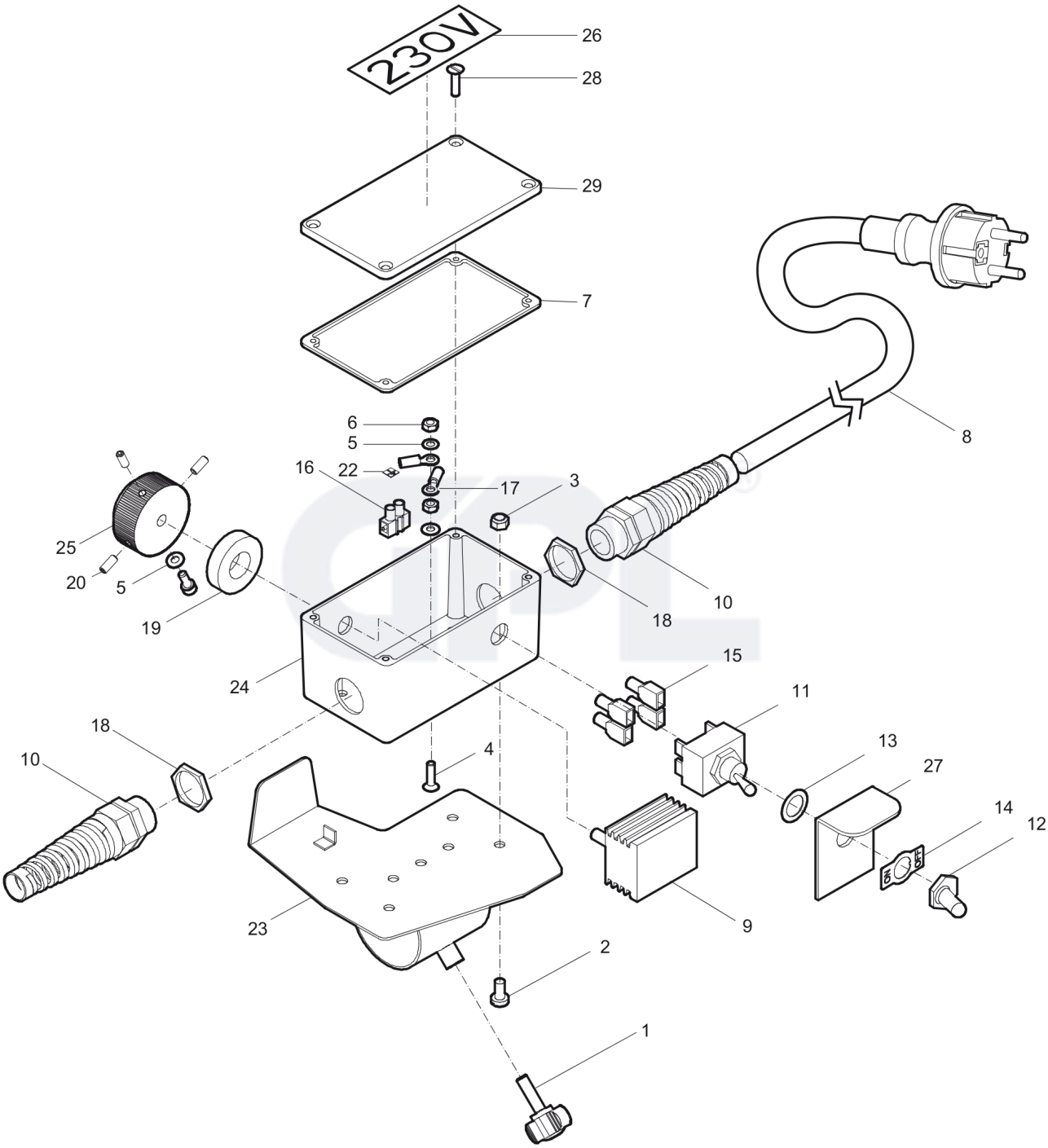

Item	Part No.	Name	Qty	L
1	595134501	Screw	1	
2	-	Screw, CS M5 x 10 mm DIN84A	4	
3	-	Lock nut, M5 DIN985	4	
4	-	Slotted screw, M4 x 14 mm DIN963A	1	
5	-	Washer	3	
6	-	Nut, M4 DIN934	2	
7	595392301	Rubber seal	1	
8	595391901	Cable with plug	1	
9	595392201	Regulator	1	
10	594684501	Stuffing box	2	
11	594384801	Switch	1	
12	594384901	Membrane	1	
13	594385001	Washer	1	
14	594386801	Decal	1	
15	595153301	Terminal	4	
16	594545701	Junction box	1	
17	594853601	Spade	3	
18	595217501	Plastic nut	2	
19	594225701	Foam washer	1	
20	-	Set screw, HC M4 x 10 mm ISO4028	3	
22	595134901	Label	1	
23	595136201	Switchbox holder	1	
24	595136301	Aluminum box	1	
25	-	Button	1	
26	594779101	Votage label, 230V	1	
27	595140601	Cover	1	
28	-	Screw M6 x 20 mm 8.8 A2K	4	
29	-	Switchbox cover	1	

Spare parts list Single phase vibrator

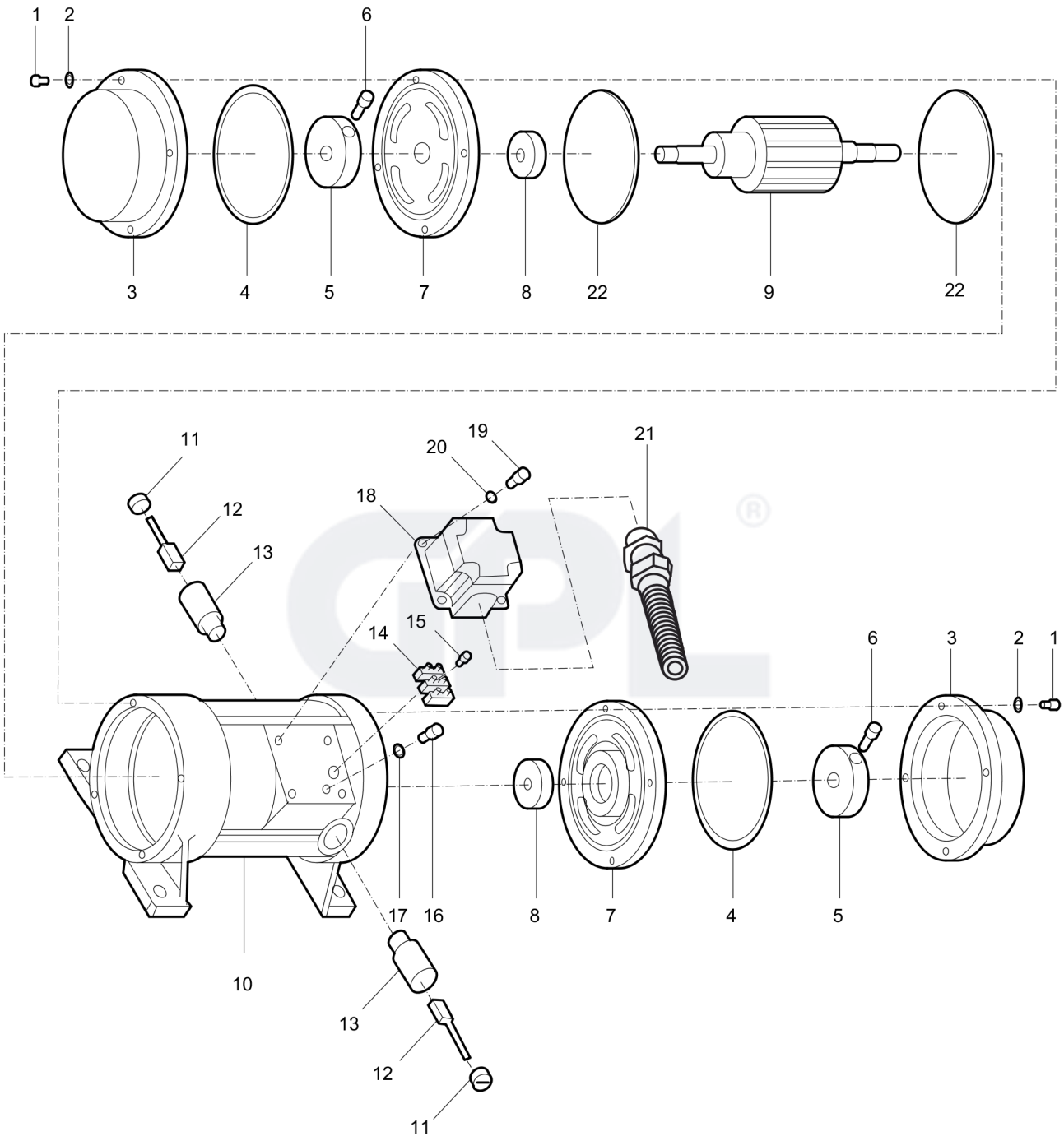

Item	Part No.	Name	Qty	L
1	-	Screw M6 x 20 mm 8.8 A2K	8	
2	595060401	Washer	8	
3	-	Injector part	2	
4	595516101	O-ring	2	
5	595444001	Eccentric	2	
6	-	Screw, C HC M5 x 10 mm DIN912	2	
7	-	Flange	2	
8	595516201	Ball bearing	2	
9	594676501	Rotor	1	
10	-	Stator complete	1	
11	594676601	Brush cover	2	
12	594676701	Brushes	1	
13	594676801	Brush retainer	2	
14	595217401	Terminal board	1	
15	-	Self tapping screw	1	
16	-	Screw, C HC M4 x 8 mm DIN912	1	
17	595182501	Washer, Ø4 mm	1	
18	-	Injector part	1	
19	-	Screw, C HC M5 x 16 mm DIN912	1	
20	594273501	Washer	1	
21	594792201	Gland	1	
22	595516301	O-ring	2	

Spare parts list Tilting device BV20

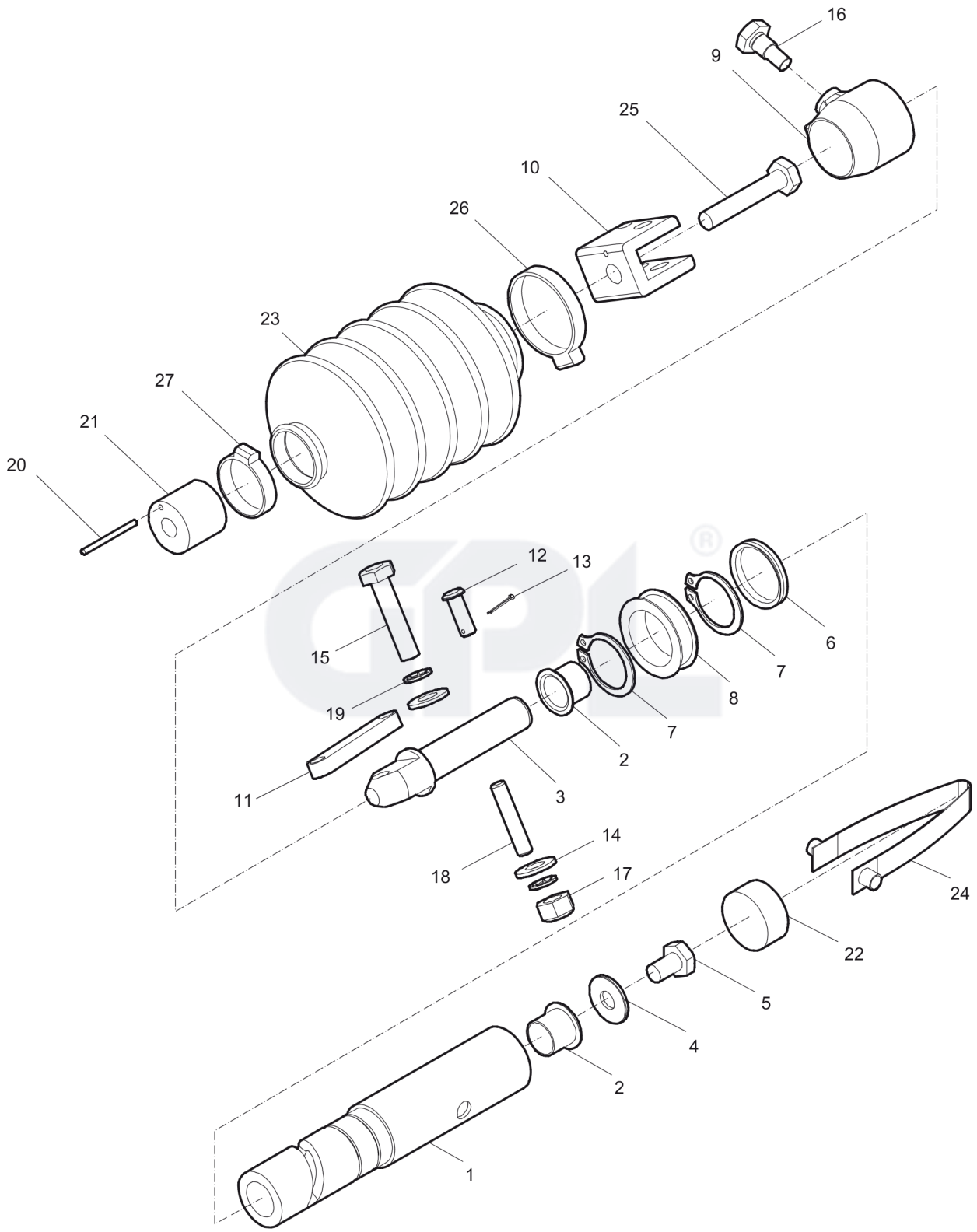

Item	Part No.	Name	Qty	L
1	595443901	Tube	1	
2	595390701	Bearing	2	
3	594780301	Shaft	1	
4	-	Washer	1	
5	-	Screw, H M10 x 16 mm DIN933	1	
6	594766001	V-ring	1	
7	594766301	Clamp ring	2	
8	594780401	Ring	1	
9	595140501	Slid	1	
10	594780501	Fork	1	
11	595443601	Connection	1	
12	595343701	Clevis pin, Ø8 x 22 mm, Ø0.31 x 0.86 in.	1	
13	595343401	Split pin	1	
14	-	Washer	2	
15	-	Screw, H M10 x 45 mm DIN931	1	
16	595140401	Screw	1	
17	-	Lock nut, M10 DIN985	1	
18	-	Cylindric pin, Ø8 x 40 mm H8, Ø0.31 x 1.57 mm	1	
19	-	Lock washer, Quicklock Ø8 mm, Ø0.31 in.	2	
20	-	Spring pin, Ø3 x 40 mm, Ø0.11 x 1.57 in.	1	
21	595443501	Spacer	1	
22	595391001	Plug	1	
23	594225601	Gusset	1	
24	594228001	Fastenning spring	1	
25	-	Screw, H M10 x 55 mm CL8.8 DIN931	1	
26	595354101	Hose clamp	1	
27	595354001	Hose clamp	1	

Spare parts list BV20G

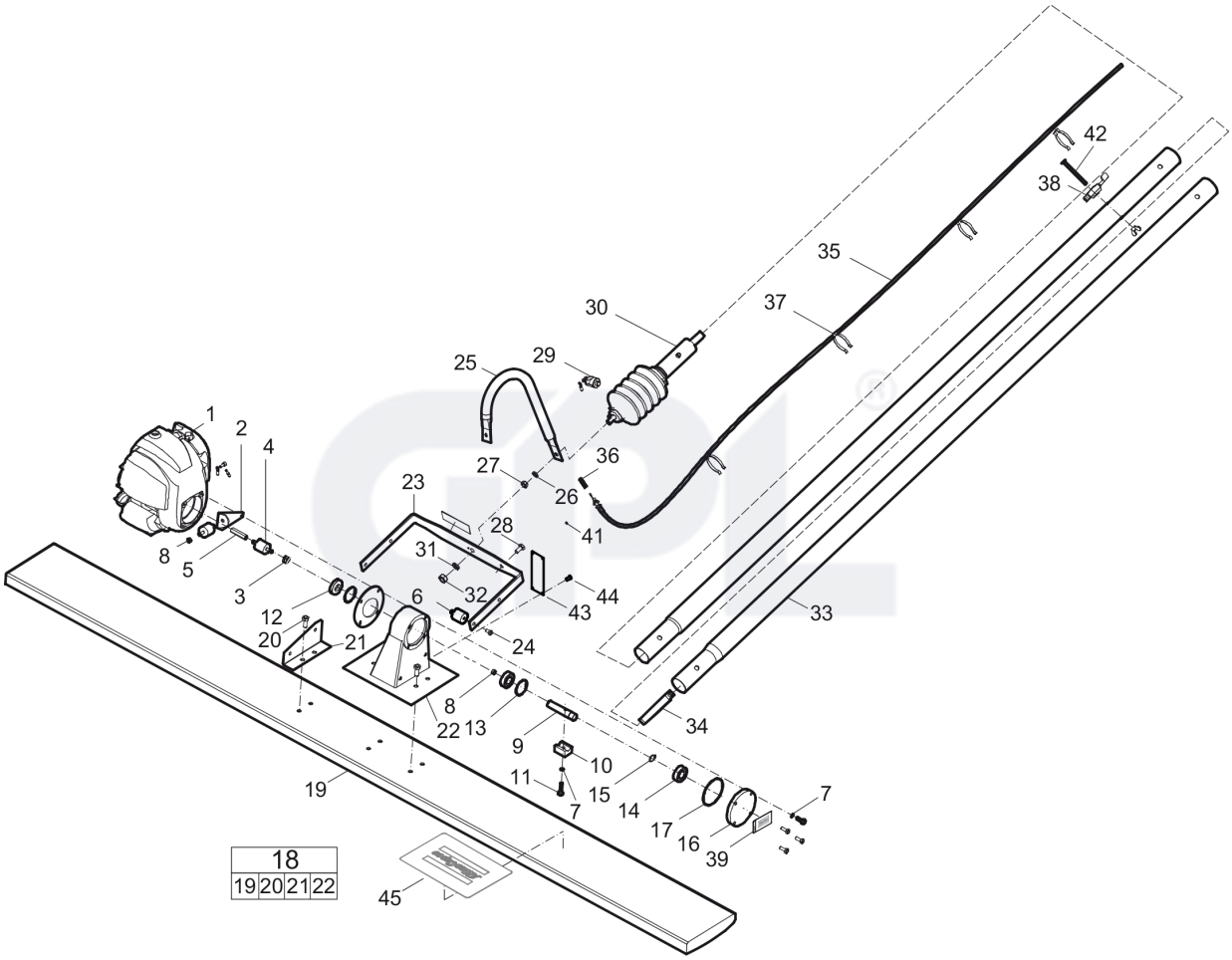

Item	Part No.	Name	Qty	L
1	594412901	Engine GX25	1	
2	594253201	Mounting plate	1	
3	-	Washer, Ø6 mm DIN7349, Ø0.23 in.	1	
4	594227701	Shock absorber	6	
5	594253101	Splice nut	1	
6	594225501	Shock absorber	4	
7	-	Lock washer, Nord-Lock M6	17	
8	-	Nut, M6 DIN934	8	
9	594248001	Vibrator shaft	1	
10	594248201	Eccentric	1	
11	-	Screw, H M6 x 25 mm DIN933	1	
12	594221001	Radial seal, A 15 x 35 x 7 mm, 0.59 x 1.37 x 0.27 in.	1	
13	-	Retaining ring, Ø15 x 1.5 mm DIN472, 0.59 x 0.06 in.	2	
14	594550801	Bearing	2	
15	-	Retaining ring, Ø15 x 1.5 mm DIN471, 0.59 x 0.06 in.	1	
16	594628501	Flange	1	
17	-	O-ring	1	
18	594244801	Beam complete	1	
19	--	Profile	1	
20	--	Screw, H M8 x 20 mm DIN933	6	
21	--	Square plate	1	
22	--	Vibrator holder	1	
23	594244901	Fork	1	
24	-	Screw, M6 x 10 mm DIN933	4	
25	595089401	Handle	1	
26	-	Lock washer, Nord-Lock M8	1	
27	-	Nut, M8 DIN934	1	
28	-	Screw M6 x 20 mm 8.8 A2K	1	
29	594229801	Kill switch	1	
30	594237001	Tilting device	1	
31	-	Lock washer, Nord-Lock M10	1	
32	-	Nut, M10 DIN934	1	
33	595475901	Handle tube	2	
34	594228001	Fastenning spring	1	
35	594253301	Cable	1	
36	595134701	Pressure spring	1	
37	594230901	Tool holder	4	
38	594248301	Throttle	1	

Item	Part No.	Name	Qty	L
39	595212601	Model and logo decal	1	
41	-	Screw M6 x 20 mm 8.8 A2K	4	
42	595469301	Screw M6 x 70	1	
43	595361001	Data plate	1	
44	594793201	Rivet	1	
45	595212001	Decal logo	2	

This page intentionally left blank

Spare parts list BV 20 H

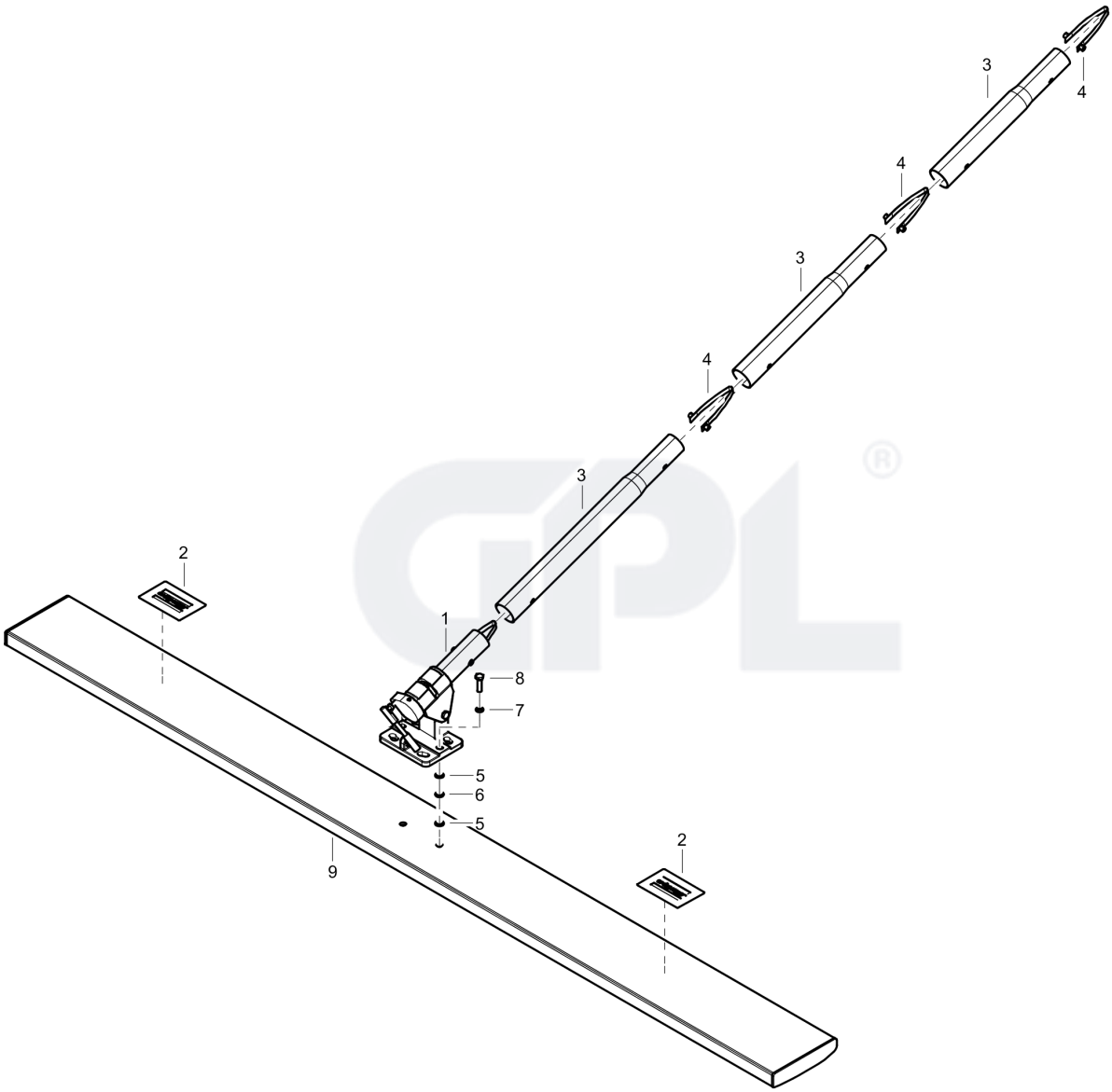

Item	Part No.	Name	Qty	L
1	594227801	Turn head	1	
2	595212001	Decal logo	2	
3	595029501	Handle tube	4	
4	594228001	Fastenning spring	3	
5	595354601	Sael washer	4	
6	595036601	Plain washer	2	
7	595043901	Lock washer	2	
8	595344301	Screw DIN933	2	
9	595136401	Profil 2m	1	

GPL®

Any unauthorized use or copying of the contents or any part thereof is prohibited. This applies in particular to trademarks, model denominations, part numbers, and drawings.